# Octal Edge-Triggered D-Type Flip-Flops With 3-State Outputs

## 1 FEATURES

- **Operating Voltage Range: 2V to 5.5V**
- **Low Power Consumption: 40µA (Max)**
- **Operating Temperature Range: -40°C to +125°C**
- **3-State Outputs Drive Bus Lines Directly**
- **Micro Size Packages: TSSOP20, SOP20**

## 2 APPLICATIONS

- **Power Sub-station controls**
- **Industrial**
- **Personal electronics**
- **Test and Measurement Solutions**
- **Patient Monitoring**

### Simplified Schematic

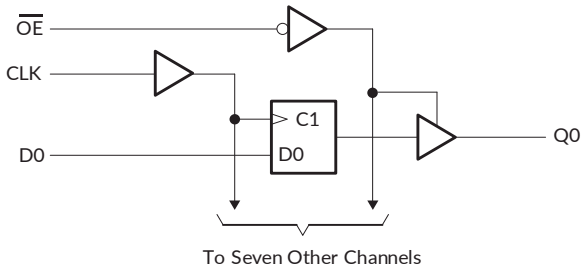


## 3 DESCRIPTIONS

The RS574 is high-speed octal D-type flip-flops featuring separate D-type inputs for each flip-flop and 3-state outputs for bus oriented applications. A clock (CLK) and an output enable ($\overline{OE}$) input are common to all flip-flops.

The 8 flip-flops will store the state of their individual D-inputs that meet the set-up and hold times requirements on the low-to-high CLK transition. When $\overline{OE}$ is low the contents of the 8 flip-flops are available at the outputs. When $\overline{OE}$ is high, the outputs go to the high-impedance OFF-state. Operation of the $\overline{OE}$ input does not affect the state of the flip-flops.

This device available in Green TSSOP20, SOP20 packages. It operates over an ambient temperature range of -40°C to +125°C.

**Device Information (1)**

| PART NUMBER | PACKAGE | BODY SIZE (NOM) |
|---|---|---|
| RS574 | TSSOP20 | 6.50mm×4.40mm |
| | SOP20 | 12.80mm×7.50mm |

(1) For all available packages, see the orderable addendum at the end of the data sheet.

# Table of Contents

**1 FEATURES** ..... 1
**2 APPLICATIONS** ..... 1
**3 DESCRIPTIONS** ..... 1
**4 Revision History** ..... 3
**5 PACKAGE/ORDERING INFORMATION** (1) ..... 4
**6 PIN CONFIGURATIONS** ..... 5
**7 SPECIFICATIONS** ..... 6
7.1 Absolute Maximum Ratings (1) ..... 6
7.2 ESD Ratings ..... 6
**8 ELECTRICAL CHARACTERISTICS** ..... 7
8.1 Recommended Operating Conditions ..... 7
8.2 DC Characteristics ..... 8
8.3 Timing Requirements ..... 9
8.4 Switching Characteristics ..... 9
8.5 Operating Characteristics ..... 9
8.6 TYPICAL CHARACTERISTICS ..... 10
**9 Parameter Measurement Information** ..... 11
**10 Detailed Description** ..... 12
10.1 Overview ..... 12
10.2 Functional Block Diagram ..... 12
10.3 Feature Description ..... 12
10.4 Device Functional Modes ..... 12
**11 Application and Implementation** ..... 13
11.1 Application Information ..... 13
11.2 Typical Application ..... 13
11.3 Design Requirements ..... 13
**12 Power Supply Recommendations** ..... 13
**13 Layout** ..... 14
13.1 Layout Guidelines ..... 14
13.2 Layout Example ..... 14
**14 PACKAGE OUTLINE DIMENSIONS** ..... 15
**15 TAPE AND REEL INFORMATION** ..... 17

# 4 Revision History

Note: Page numbers for previous revisions may different from page numbers in the current version.

| Version | Change Date | Change Item |
|---|---|---|
| A.1 | 2023/08/23 | Initial version completed |
| A.1.1 | 2024/02/29 | Modify packaging naming |
| A.2 | 2024/05/17 | Update KEY PARAMETER LIST OF TAPE AND REEL |
| A.2.1 | 2026/09/08 | Corrected the TSSOP20 Reel Width parameter error |

# 5 PACKAGE/ORDERING INFORMATION (1)

| PRODUCT | ORDERING NUMBER | TEMPERATURE RANGE | PACKAGE LEAD | PACKAGE MARKING (2) | MSL(3) | PACKAGE OPTION |
|---|---|---|---|---|---|---|
| RS574 | RS574XS20 | -40°C ~+125°C | SOP20 | RS574 | MSL3 | Tape and Reel, 1500 |
| | RS574XTSS20 | -40°C ~+125°C | TSSOP20 | RS574 | MSL3 | Tape and Reel, 4000 |

NOTE:

(1) This information is the most current data available for the designated devices. This data is subject to change without notice and revision of this document. For browser-based versions of this data sheet, refer to the right-hand navigation.

(2) There may be additional marking, which relates to the lot trace code information (data code and vendor code), the logo or the environmental category on the device.

(3) RUNIC classify the MSL level with using the common preconditioning setting in our assembly factory conforming to the JEDEC industrial standard J-STD-20F. Please align with RUNIC if your end application is quite critical to the preconditioning setting or if you have special requirement.

# 6 PIN CONFIGURATIONS

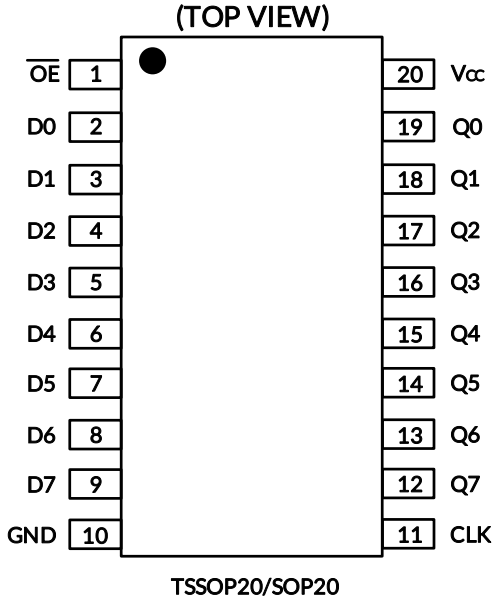


## PIN DESCRIPTION

| PIN TSSOP20/SOP20 | NAME | TYPE (1) | FUNCTION |
|---|---|---|---|
| 1 | $\overline{OE}$ | I | 3-State output enable input |
| 2 | D0 | I | Data input |
| 3 | D1 | I | Data input |
| 4 | D2 | I | Data input |
| 5 | D3 | I | Data input |
| 6 | D4 | I | Data input |
| 7 | D5 | I | Data input |
| 8 | D6 | I | Data input |
| 9 | D7 | I | Data input |
| 10 | GND | G | Ground. |
| 11 | CLK | I | Clock input |
| 12 | Q7 | O | Data output |
| 13 | Q6 | O | Data output |
| 14 | Q5 | O | Data output |
| 15 | Q4 | O | Data output |
| 16 | Q3 | O | Data output |
| 17 | Q2 | O | Data output |
| 18 | Q1 | O | Data output |
| 19 | Q0 | O | Data output |
| 20 | $V_{CC}$ | P | Supply voltage |

(1) I=input, O=output, P=power.

# 7 SPECIFICATIONS

## 7.1 Absolute Maximum Ratings [1]

over operating free-air temperature range (unless otherwise noted) [1] [2]

| | | | MIN | MAX | UNIT |
|---|---|---|---|---|---|
| $V_{CC}$ | Supply voltage range | | -0.5 | 6.5 | V |
| $V_I$ | Input voltage range [2] | | -0.5 | 6.5 | V |
| Vo | Output Voltage range [2] | | -0.5 | $V_{CC}$+0.5 | V |
| $I_{IK}$ | Input clamp current | $V_I$<0 | | -20 | mA |
| $I_{OK}$ | Output clamp current | $V_O$ < 0 or $V_O$ > $V_{CC}$ | | ±20 | mA |
| $I_O$ | Continuous output current | $V_O$ = 0 to $V_{CC}$ | | ±25 | mA |
| | Continuous current through $V_{CC}$ or GND | | | ±75 | mA |
| $\theta_{JA}$ | Package thermal impedance [3] | SOP20 | | 40 | °C/W |
| | | TSSOP20 | | 40 | |
| $T_J$ | Junction temperature [4] | | -65 | 150 | °C |
| $T_{stg}$ | Storage temperature | | -65 | 150 | °C |

(1) Stresses beyond those listed under Absolute Maximum Ratings may cause permanent damage to the device. These are stress ratings only, and functional operation of the device at these or any other conditions beyond those indicated under Recommended Operating Conditions is not implied. Exposure to absolute-maximum-rated conditions for extended periods may affect device reliability.
(2) The input and output negative-voltage ratings may be exceeded if the input and output current ratings are observed.
(3) The package thermal impedance is calculated in accordance with JESD-51.
(4) The maximum power dissipation is a function of $T_{J(MAX)}$, $R_{\theta JA}$, and $T_A$. The maximum allowable power dissipation at any ambient temperature is $P_D = (T_{J(MAX)} - T_A) / R_{\theta JA}$. All numbers apply for packages soldered directly onto a PCB.

## 7.2 ESD Ratings

The following ESD information is provided for handling of ESD-sensitive devices in an ESD protected area only.

| | | | VALUE | UNIT |
|---|---|---|---|---|
| $V_{(ESD)}$ | Electrostatic discharge | Human-Body Model (HBM), MIL-STD-883K METHOD 3015.9 | ±2000 | V |
| | | Charged-Device Model (CDM), ANSI/ESDA/JEDEC JS-002-2018 | ±1000 | |
| | | Machine Model (MM), JESD22-A115C (2010) | ±200 | |

**ESD SENSITIVITY CAUTION**

ESD damage can range from subtle performance degradation to complete device failure. Precision integrated circuits may be more susceptible to damage because very small parametric changes could cause the device not to meet its published specifications.

# 8 ELECTRICAL CHARACTERISTICS

over recommended operating free-air temperature range (TYP values are at $T_A$ = +25°C, Full=-40°C to 125°C, unless otherwise noted.) (1)

## 8.1 Recommended Operating Conditions

| PARAMETER | SYMBOL | TEST CONDITIONS | MIN | MAX | UNIT |
|---|---|---|---|---|---|
| Supply voltage | $V_{CC}$ | | 2 | 5.5 | V |
| High-level input voltage | $V_{IH}$ | $V_{CC}$=2V | 1.5 | | V |
| | | $V_{CC}$=3V | 2.1 | | |
| | | $V_{CC}$=5.5V | 3.85 | | |
| Low-level input voltage | $V_{IL}$ | $V_{CC}$=2V | | 0.5 | V |
| | | $V_{CC}$=3V | | 0.9 | |
| | | $V_{CC}$=5.5V | | 1.65 | |
| Input voltage | $V_I$ | | 0 | 5.5 | V |
| Output voltage | $V_O$ | | 0 | $V_{CC}$ | V |
| High-level output current | $I_{OH}$ | $V_{CC}$=2V | | -50 | μA |
| | | $V_{CC}$=3V to 3.6V | | -8 | mA |
| | | $V_{CC}$=4.5V to 5.5V | | -16 | |
| Low-level output current | $I_{OL}$ | $V_{CC}$=2V | | 50 | μA |
| | | $V_{CC}$=3V to 3.6V | | 8 | mA |
| | | $V_{CC}$=4.5V to 5.5V | | 16 | |
| Input transition rise or fall rate | Δt / Δv | $V_{CC}$=3V to 3.6V | | 100 | ns/V |
| | | $V_{CC}$=4.5V to 5.5V | | 20 | |
| Operating temperature | $T_A$ | | -40 | +125 | °C |

(1) All unused inputs of the device must be held at $V_{CC}$ or GND to ensure proper device operation.

## 8.2 DC Characteristics

| PARAMETER | TEST CONDITIONS | $V_{CC}$ | TEMP | MIN(2) | TYP(3) | MAX(2) | UNIT |
|---|---|---|---|---|---|---|---|
| $V_{OH}$ | $I_{OH}$ = -50μA | 2V to 5.5V | Full | $V_{CC}$-0.1 | | | V |
| | $I_{OH}$ = -4mA | 3V | | 2.8 | | | |
| | $I_{OH}$ = -8mA | 4.5V | | 4.15 | | | |
| | $I_{OH}$ = -16mA | 5.5V | | 5.1 | | | |
| $V_{OL}$ | $I_{OL}$ = 50μA | 2V to 5.5V | Full | | | 0.1 | V |
| | $I_{OL}$ = 4mA | 3V | | | | 0.2 | |
| | $I_{OL}$ = 8mA | 4.5V | | | | 0.2 | |
| | $I_{OL}$ = 16mA | 5.5V | | | | 0.5 | |
| $I_I$ | $V_I$=5.5V or GND | 0V to 5.5V | +25°C | | | ±1 | μA |
| | | | Full | | | ±2 | |
| $I_{OZ}$ (4) | $V_O$=$V_{CC}$ or GND | 5.5 | +25°C | | | ±1 | μA |
| | | | Full | | | ±2.5 | |
| $I_{CC}$ | $V_I$= $V_{CC}$ or GND, $I_O$=0 | 5.5V | +25°C | | | 4 | μA |
| | | | Full | | | 40 | |
| $C_i$ (Input Capacitance) | $V_I$ = $V_{CC}$ or GND | 5V | +25°C | | 6 | | pF |
| $C_O$ (Output Capacitance) | $V_O$ = $V_{CC}$ or GND | 5V | +25°C | | 6 | | pF |

(1) All unused inputs of the device must be held at $V_{CC}$ or GND to ensure proper device operation.
(2) Limits are 100% production tested at 25°C. Limits over the operating temperature range are ensured through correlations using statistical quality control (SQC) method.
(3) Typical values represent the most likely parametric norm as determined at the time of characterization. Actual typical values may vary over time and will also depend on the application and configuration.
(4) For input and output pins, $I_{OZ}$ includes the input leakage current.

## 8.3 Timing Requirements

over recommended operating free-air temperature range (unless otherwise noted) (1)

| SYMBOL | PARAMETER | TEMP | $V_{CC}$=3.3V ± 0.3V | | $V_{CC}$=5V ± 0.5V | | UNIT |
|---|---|---|---|---|---|---|---|
| | | | MIN | MAX | MIN | MAX | |
| $t_w$ | Pulse duration, CLK high or low | 25°C | 7 | | 7 | | ns |
| | | Full | 7.5 | | 7.5 | | |
| $t_{su}$ | Setup time, data before CLKt | 25°C | -4 | | -4 | | ns |
| | | Full | -4.5 | | -4.5 | | |
| $t_h$ | Hold time, data after CLKt | 25°C | 6 | | 5 | | ns |
| | | Full | 6.5 | | 5.5 | | |

(1) This parameter is ensured by design and/or characterization and is not tested in production.

## 8.4 Switching Characteristics

over recommended operating free-air temperature range (unless otherwise noted) (1)

| PARAMETER | FROM (INPUT) | TO (OUTPUT) | LOAD CAPACITANCE | TEMP | $V_{CC}$=3.3V ± 0.3V | | | $V_{CC}$=5V ± 0.5V | | | UNIT |
|---|---|---|---|---|---|---|---|---|---|---|---|
| | | | | | MIN | TYP | MAX | MIN | TYP | MAX | |
| $t_{PLH}$ | CLK | Q | $C_L$= 15 pF | 25°C | | 11 | | | 10 | | ns |
| | | | | Full | 5.5 | | 20 | 5 | | 18 | |
| $t_{PHL}$ | CLK | Q | $C_L$= 15 pF | 25°C | | 11 | | | 10 | | ns |
| | | | | Full | 5.5 | | 20 | 5 | | 18 | |
| $t_{PZH}$ | $\overline{OE}$ | Q | $C_L$= 15 pF | 25°C | | 11 | | | 7 | | ns |
| | | | | Full | 5.5 | | 20 | 3.5 | | 14 | |
| $t_{PZL}$ | $\overline{OE}$ | Q | $C_L$= 15 pF | 25°C | | 8 | | | 6 | | ns |
| | | | | Full | 4 | | 16 | 3 | | 12 | |
| $t_{PHZ}$ | $\overline{OE}$ | Q | $C_L$= 15 pF | 25°C | | 12 | | | 8 | | ns |
| | | | | Full | 6 | | 22 | 4 | | 16 | |
| $t_{PLZ}$ | $\overline{OE}$ | Q | $C_L$= 15 pF | 25°C | | 11 | | | 7 | | ns |
| | | | | Full | 5.5 | | 20 | 3.5 | | 14 | |

(1) This parameter is ensured by design and/or characterization and is not tested in production.

## 8.5 Operating Characteristics

$T_A$ = +25°C

| PARAMETER | TEST CONDITIONS | $V_{CC}$ = 5V | UNIT |
|---|---|---|---|
| | | TYP | |
| $C_{pd}$ Power dissipation capacitance | No load, f = 1 MHz | 20 | pF |

## 8.6 TYPICAL CHARACTERISTICS

NOTE: The graphs and tables provided following this note are a statistical summary based on a limited number of samples and are provided for informational purposes only.
At $T_A$ = +25°C, unless otherwise noted.

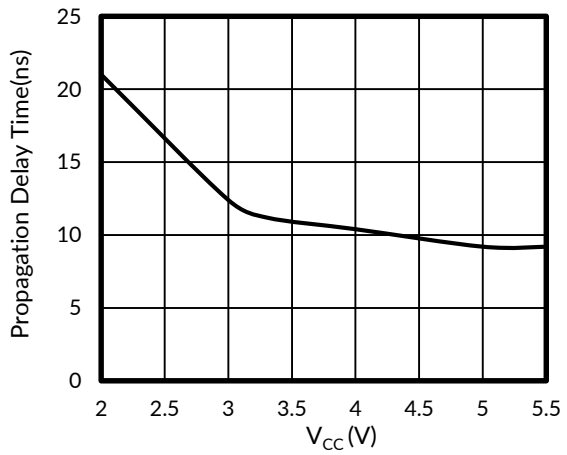


**Figure 1. TPD vs $V_{CC}$**

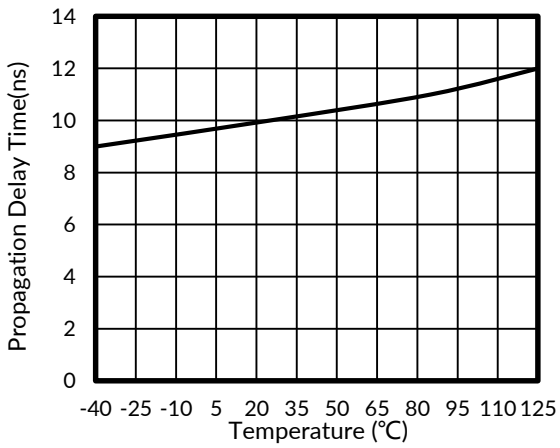


**Figure 2. TPD vs Temperature**

# 9 Parameter Measurement Information

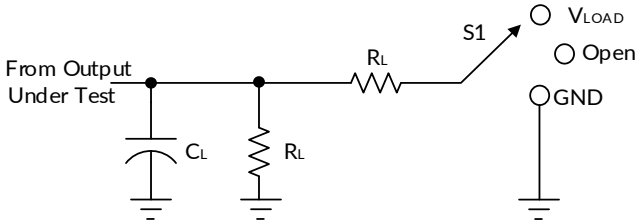


| TEST | S1 |
|---|---|
| $t_{PLH}/t_{PHL}$ | Open |
| $t_{PLZ}/t_{PZL}$ | $V_{LOAD}$ |
| $t_{PHZ}/t_{PZH}$ | GND |

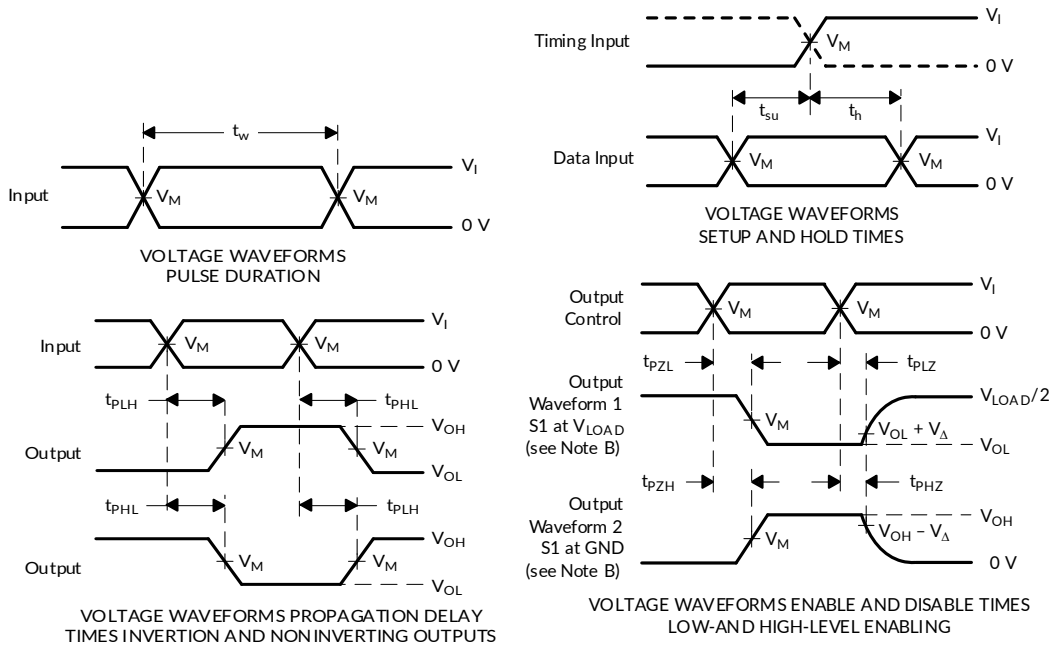


NOTES: A. $C_L$ includes probe and jig capacitance.
B. Waveform 1 is for an output with internal conditions such that the output is low, except when disabled by the output control. Waveform 2 is for an output with internal conditions such that the output is high, except when disabled by the output control.
C. All input pulses are supplied by generators having the following characteristics: PRR ≤ 10 MHz, $Z_O$ = 50Ω.
D. The outputs are measured one at a time, with one transition per measurement.
E. $t_{PLZ}$ and $t_{PHZ}$ are the same as $t_{dis}$.
F. $t_{PZL}$ and $t_{PZH}$ are the same as $t_{en}$.
G. $t_{PLH}$ and $t_{PHL}$ are the same as $t_{pd}$.
H. All parameters and waveforms are not applicable to all devices.

**Figure 3. Load Circuit and Voltage Waveforms**

# 10 Detailed Description

## 10.1 Overview

The RS574 devices are octal edge-triggered D-type flip-flops that feature 3-state outputs designed specifically for driving highly capacitive or relatively low-impedance loads. These devices are particularly suitable for implementing buffer registers, I/O ports, bidirectional bus drivers, and working registers.

On the positive transition of the clock (CLK) input, the Q outputs are set to the logic levels of the data (D) inputs. The states of the Q outputs are not predictable until the first valid clock.

A buffered output-enable ($\overline{OE}$) input can be used to place the eight outputs in either a normal logic state (high or low) or the high-impedance state. In the high-impedance state, the outputs neither load nor drive the bus lines significantly. The high-impedance state and the increased drive provide the capability to drive bus lines without interface or pull-up components.

## 10.2 Functional Block Diagram

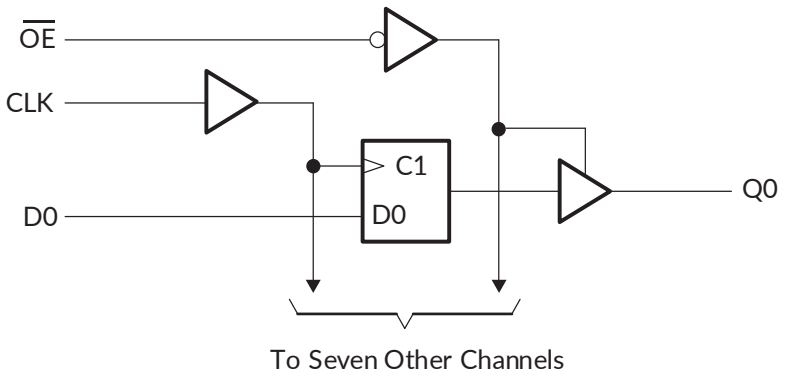


## 10.3 Feature Description

- 5.5V tolerant input allows for 5 V to 3.3 V voltage translation
- Slow edges reduce output ringing

## 10.4 Device Functional Modes

**Table 1. Function Table (Each Flip-Flop)**

| INPUT | | | OUTPUT |
|---|---|---|---|
| $\overline{OE}$ | CLK | D | Q |
| L | ↑ | H | H |
| L | ↑ | L | L |
| L | H or L | X | $Q_0$ |
| H | X | X | Z |

# 11 Application and Implementation

Information in the following applications sections is not part of the RUNIC component specification, and RUNIC does not warrant its accuracy or completeness. RUNIC's customers are responsible for determining suitability of components for their purposes. Customers should validate and test their design implementation to confirm system functionality.

## 11.1 Application Information

RS574 is a low-drive CMOS device that can be used for a multitude of bus interface type applications where output ringing is a concern. The low drive and slow edge rates will minimize overshoot and undershoot on the outputs. The inputs can accept voltages to 5.5 V at any valid VCC making it Ideal for down translation.

## 11.2 Typical Application

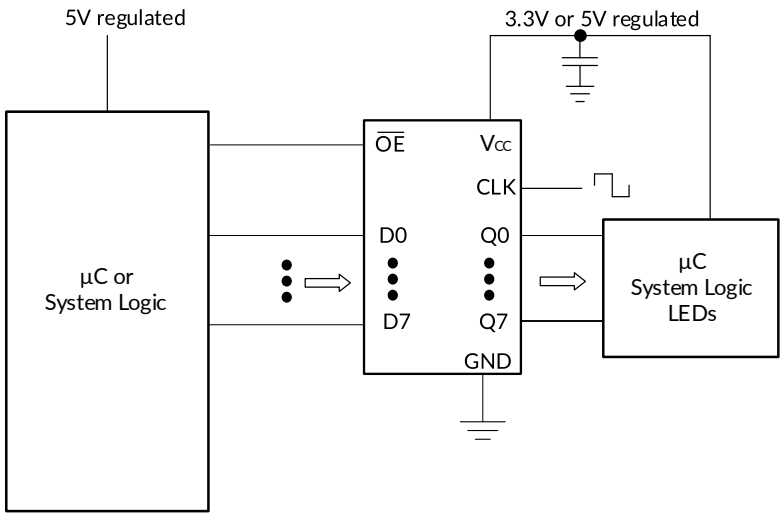


**Figure 4. Typical Application Schematic**

## 11.3 Design Requirements

This device uses CMOS technology and has balanced output drive. Care should be taken to avoid bus contention because it can drive currents that would exceed maximum limits. Outputs can be combined to produce higher drive but the high drive will also create faster edges into light loads so routing and load conditions should be considered to prevent ringing.

# 12 Power Supply Recommendations

The power supply pin should have a good bypass capacitor to prevent power disturbance. For devices with a single supply, a 0.1uF capacitor is recommended and if there are multiple $V_{CC}$ terminals then 0.01uF or 0.022uF capacitors are recommended for each power terminal. It is acceptable to parallel multiple bypass caps to reject different frequencies of noise. The 0.1µF and 1µF capacitors are commonly used in parallel. The bypass capacitor should be installed as close to the power terminal as possible.

# 13 Layout

## 13.1 Layout Guidelines

When using multiple bit logic devices, inputs should not float. In many cases, functions or parts of functions of digital logic devices are unused. Some examples are when only two inputs of a triple-input AND gate are used, or when only 3 of the 4-buffer gates are used. Such input pins should not be left unconnected because the undefined voltages at the outside connections result in undefined operational states.

Specified in Figure 5 are rules that must be observed under all circumstances. All unused inputs of digital logic devices must be connected to a high or low bias to prevent them from floating. The logic level that should be applied to any particular unused input depends on the function of the device. Generally they will be tied to GND or $V_{CC}$, whichever makes more sense or is more convenient. It is acceptable to float outputs unless the part is a transceiver. If the transceiver has an output enable pin, it will disable the outputs section of the part when asserted. This will not disable the input section of the $I/O_S$ so they also cannot float when disabled.

## 13.2 Layout Example

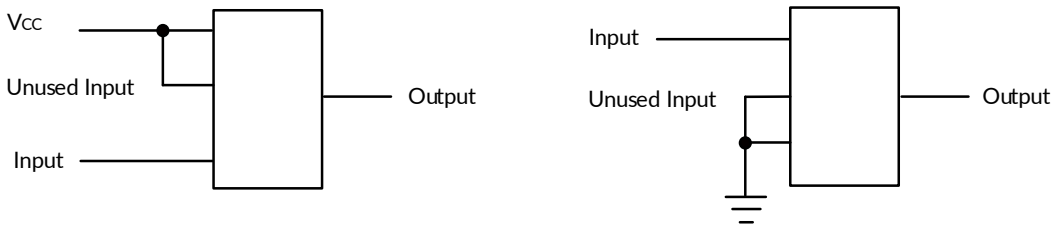


**Figure 5. Layout Diagram**

# 14 PACKAGE OUTLINE DIMENSIONS

## TSSOP20 (4)

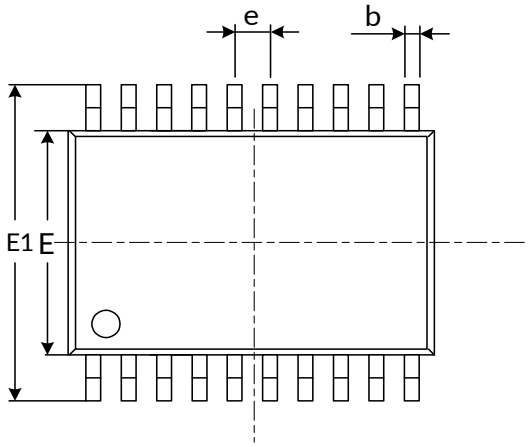


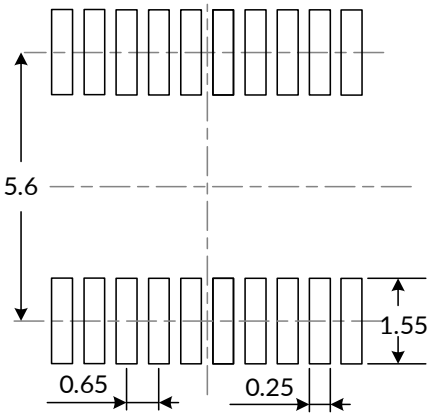


RECOMMENDED LAND PATTERN (Unit: mm)

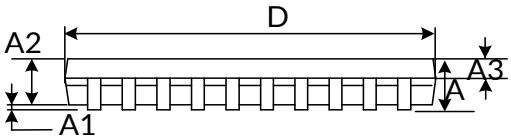


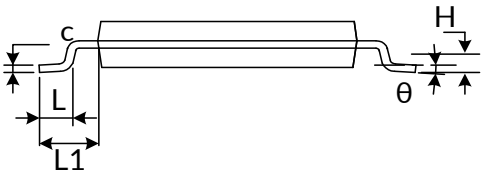


| Symbol | Dimensions In Millimeters | | Dimensions In Inches | |
|---|---|---|---|---|
| | Min | Max | Min | Max |
| A (1) | | 1.200 | | 0.047 |
| A1 | 0.050 | 0.150 | 0.002 | 0.006 |
| A2 | 0.800 | 1.050 | 0.031 | 0.041 |
| A3 | 0.390 | 0.490 | 0.015 | 0.020 |
| b | 0.200 | 0.290 | 0.008 | 0.011 |
| c | 0.130 | 0.170 | 0.005 | 0.007 |
| D (1) | 6.400 | 6.600 | 0.252 | 0.260 |
| E (1) | 4.300 | 4.500 | 0.169 | 0.177 |
| E1 | 6.200 | 6.600 | 0.244 | 0.260 |
| e | 0.650(BSC) (2) | | 0.026(BSC) (2) | |
| L | 0.450 | 0.750 | 0.018 | 0.030 |
| H | 0.250(TYP) | | 0.010(TYP) | |
| θ | 0° | 8° | 0° | 8° |
| L1 | 1.00(REF) (3) | | 0.039(REF) (3) | |

NOTE:

1. Plastic or metal protrusions of 0.15mm maximum per side are not included.
2. BSC (Basic Spacing between Centers), "Basic" spacing is nominal.
3. REF is the abbreviation for Reference.
4. This drawing is subject to change without notice.

## SOP20 (4)

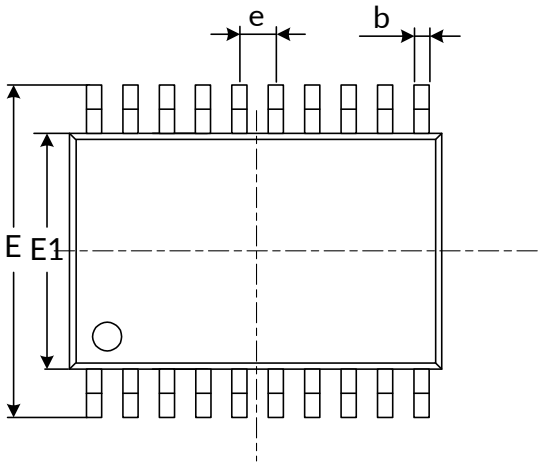


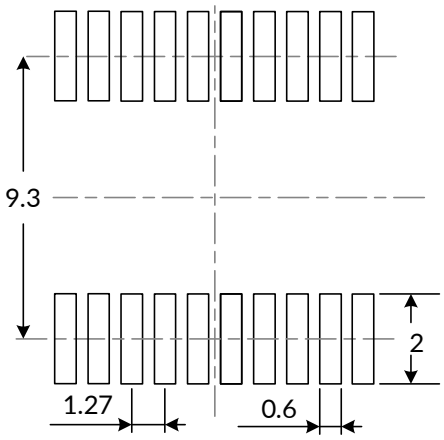


RECOMMENDED LAND PATTERN (Unit: mm)

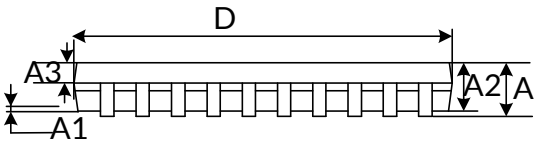


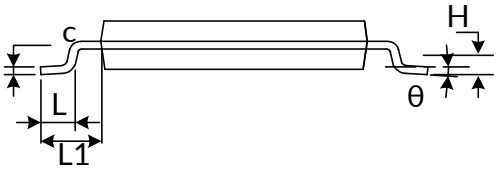


| Symbol | Dimensions In Millimeters | | Dimensions In Inches | |
|---|---|---|---|---|
| | Min | Max | Min | Max |
| A (1) | | 2.650 | | 0.104 |
| A1 | 0.100 | 0.300 | 0.004 | 0.012 |
| A2 | 2.250 | 2.350 | 0.089 | 0.093 |
| A3 | 0.970 | 1.070 | 0.038 | 0.042 |
| b | 0.390 | 0.470 | 0.015 | 0.019 |
| c | 0.250 | 0.290 | 0.010 | 0.011 |
| D (1) | 12.700 | 12.900 | 0.500 | 0.508 |
| E | 10.100 | 10.500 | 0.398 | 0.413 |
| E1 (1) | 7.400 | 7.600 | 0.291 | 0.299 |
| e | 1.270(BSC) (2) | | 0.050(BSC) (2) | |
| L | 0.700 | 1.000 | 0.028 | 0.039 |
| H | 0.250(TYP) | | 0.010(TYP) | |
| θ | 0° | 8° | 0° | 8° |
| L1 | 1.400(REF) (3) | | 0.055(REF) (3) | |

NOTE:

1. Plastic or metal protrusions of 0.15mm maximum per side are not included.
2. BSC (Basic Spacing between Centers), "Basic" spacing is nominal.
3. REF is the abbreviation for Reference.
4. This drawing is subject to change without notice.

# 15 TAPE AND REEL INFORMATION

## REEL DIMENSIONS

## TAPE DIMENSION

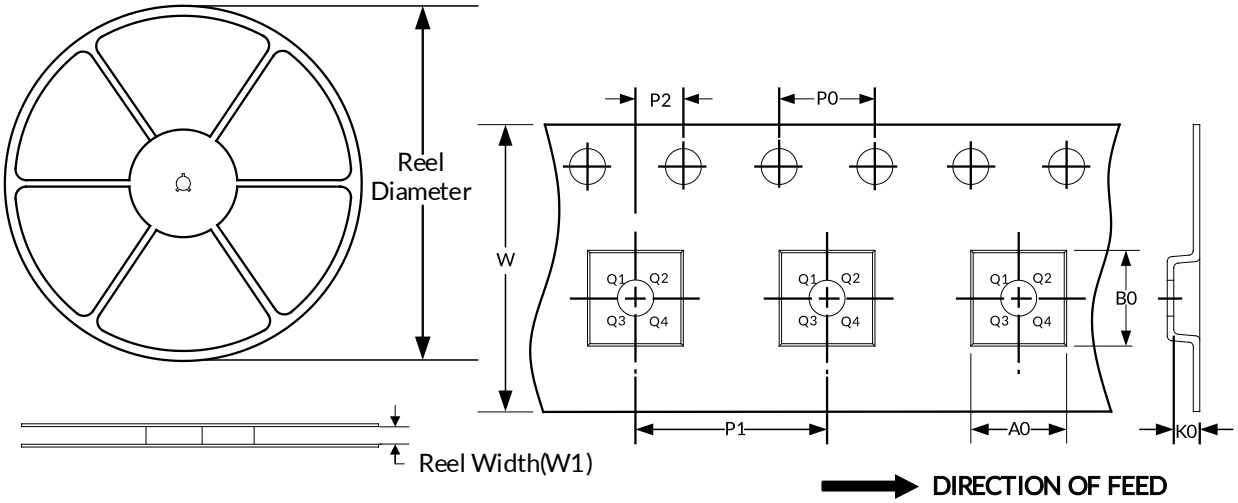


NOTE: The picture is only for reference. Please make the object as the standard.

## KEY PARAMETER LIST OF TAPE AND REEL

| Package Type | Reel Diameter | Reel Width(mm) | A0 (mm) | B0 (mm) | K0 (mm) | P0 (mm) | P1 (mm) | P2 (mm) | W (mm) | Pin1 Quadrant |
|---|---|---|---|---|---|---|---|---|---|---|
| TSSOP20 | 13” | 16.4 | 6.75 | 6.95 | 1.20 | 4.0 | 8.0 | 2.0 | 16.0 | Q1 |
| SOP20 | 13” | 24.4 | 10.75 | 13.55 | 2.65 | 4.0 | 12.0 | 2.0 | 24.0 | Q1 |

NOTE:
1. All dimensions are nominal.
2. Plastic or metal protrusions of 0.15mm maximum per side are not included.

# IMPORTANT NOTICE AND DISCLAIMER

Jiangsu RUNIC Technology Co., Ltd. will accurately and reliably provide technical and reliability data (including data sheets), design resources (including reference designs), application or other design advice, WEB tools, safety information and other resources, without warranty of any defect, and will not make any express or implied warranty, including but not limited to the warranty of merchantability Implied warranty that it is suitable for a specific purpose or does not infringe the intellectual property rights of any third party.

These resources are intended for skilled developers designing with RUNIC products You will be solely responsible for: (1) Selecting the appropriate products for your application; (2) Designing, validating and testing your application; (3) Ensuring your application meets applicable standards and any other safety, security or other requirements; (4) RUNIC and the RUNIC logo are registered trademarks of RUNIC INCORPORATED. All trademarks are the property of their respective owners; (5) For change details, review the revision history included in any revised document. The resources are subject to change without notice. Our company will not be liable for the use of this product and the infringement of patents or third-party intellectual property rights due to its use.