RS1G125 Single Bus Buffer Gate With 3-State Output

1 FEATURES

- **Operating Voltage Range:1.65V to 5.5V**
- **Low Power Consumption:1μA (Max)**
- **Operating Temperature Range: -40°C to +125°C**
- **Inputs Accept Voltage to 5.5V**
- **±24mA Output Drive at V_{CC}=3.0V**
- **Latch-up Performance Exceeds 100mA**
- **Micro SIZE PACKAGES: SOT23-5, SC70-5, XDFN1X1-6**

2 APPLICATIONS

- **AV Receiver**
- **Cable Modem Termination Systems**
- **Digital Picture Frame (DPF)**
- **High-Speed Data Acquisition and Generation**
- **Motor Controls: High-Voltage**
- **Personal Navigation Device (GPS)**
- **Portable Media Player**
- **Video Communication Systems**

Simplified Schematic

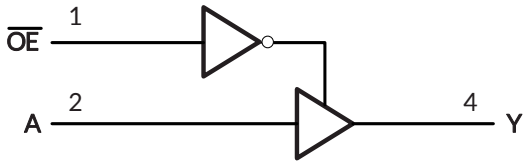

3 DESCRIPTIONS

The single buffer is designed for 1.65V to 5.5V V_{CC} operation. The RS1G125 device is single line driver with 3-state output. The output is disabled when the output-enable ($\overline{OE}$) input is high.

This device is fully specified for partial-power-down applications using I_{off}. The I_{off} circuitry disables the outputs, preventing damaging current backflow through the device when it is powered down.

To ensure the high-impedance state during power up or power down, $\overline{OE}$ should be tied to V_{CC} through a pullup resistor, the minimum value of the resistor is determined by the current-sinking capability of the driver.

The RS1G125 is available in Green SOT23-5, SC70-5 and XDFN1X1-6 packages. It operates over an ambient temperature range of -40°C to +125°C.

Device Information (1)

PART NUMBER	PACKAGE	BODY SIZE (NOM)
RS1G125	SOT23-5	2.92mm×1.60mm
	SC70-5	2.10mm×1.25mm
	XDFN1X1-6	1.00mm×1.00mm

(1) For all available packages, see the orderable addendum at the end of the data sheet.

4 FUNCTION TABLE

INPUTS		OUTPUT
$\overline{OE}$	A	Y
L	H	H
L	L	L
H	X	Z

H=HIGH Logic Level
L =LOW Logic Level
X=Don't Care
Z=High-impedance OFF-state

Table of Contents

1 FEATURES 1
2 APPLICATIONS 1
3 DESCRIPTIONS 1
4 FUNCTION TABLE 1
5 Revision History 3
6 PACKAGE/ORDERING INFORMATION (1) 4
7 PIN CONFIGURATIONS 5
8 Specifications 6
8.1 Absolute Maximum Ratings (1) 6
8.2 ESD Ratings 6
9 ELECTRICAL CHARACTERISTICS 7
9.1 Recommended Operating Conditions 7
9.2 Electrical Characteristics 7
9.3 Switching Characteristics, C_L=30pF or 50pF 8
9.4 Operating Characteristics 8
10 Parameter Measurement Information 9
11 PACKAGE OUTLINE DIMENSIONS 10
12 TAPE AND REEL INFORMATION 13

5 Revision History

Note: Page numbers for previous revisions may different from page numbers in the current version.

Version	Change Date	Change Item
A.1	2021/02/05	Initial version completed
A.2	2022/04/01	1.Added the TAPE AND REEL INFORMATION
A.3	2022/04/27	Update PACKAGE MARKING on Page 5@RevA.2
A.4	2023/06/08	Add RS1G125XC5-G ORDERING NUMBER and MSL on Page 5@RevA.3
A.5	2023/09/26	Add DFN1X1-6L PACKAGE
A.5.1	2024/02/28	1.Delete 9.3 Switching Characteristics, C_L=15pF 2.Update 9.4 Switching Characteristics, C_L=30pF or 50pF 3.Modify packaging naming

6 PACKAGE/ORDERING INFORMATION (1)

PRODUCT	ORDERING NUMBER	TEMPERATURE RANGE	PACKAGE LEAD	PACKAGE MARKING (2)	MSL(3)	PACKAGE OPTION
RS1G125	RS1G125XF5	-40°C ~+125°C	SOT23-5	1G125	MSL3	Tape and Reel,3000
	RS1G125XC5	-40°C ~+125°C	SC70-5 (4)	1G125	MSL3	Tape and Reel,3000
	RS1G125XC5-G	-40°C ~+125°C	SC70-5 (4)	1G125	MSL1	Tape and Reel,3000
	RS1G125XUTDN6	-40°C ~+125°C	XDFN1X1-6	25	MSL3	Tape and Reel,5000

NOTE:

(1) This information is the most current data available for the designated devices. This data is subject to change without notice and revision of this document. For browser-based versions of this data sheet, refer to the right-hand navigation.

(2) There may be additional marking, which relates to the lot trace code information (data code and vendor code), the logo or the environmental category on the device.

(3) MSL, The Moisture Sensitivity Level rating according to the JEDEC industry standard classifications.

(4) Equivalent to SOT353.

7 PIN CONFIGURATIONS

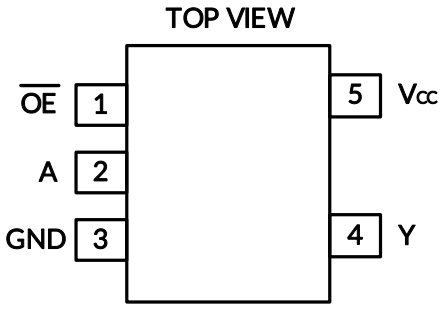

SOT23-5/SC70-5

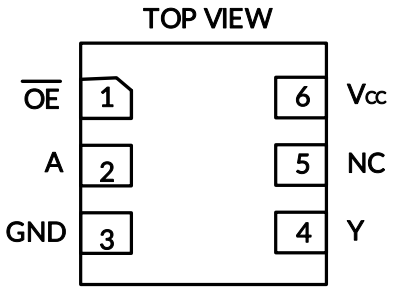

XDFN1X1-6

PIN DESCRIPTION

PIN		NAME	I/O TYPE (1)	FUNCTION
SOT23-5/SC70-5	XDFN1X1-6			
1	1	$\overline{OE}$	I	$\overline{OE}$ Enable/Input
2	2	A	I	A Input
3	3	GND	-	Ground Pin
4	4	Y	O	Y Output
-	5	NC	-	Not connected
5	6	Vcc	-	Power Pin

(1) I=input, O=output.

8 Specifications

8.1 Absolute Maximum Ratings [1]

over operating free-air temperature range (unless otherwise noted) [1] [2]

			MIN	MAX	UNIT
V_{CC}	Supply voltage range		-0.5	6.5	V
V_I	Input voltage range [2]		-0.5	6.5	V
Vo	Voltage range applied to any output in the high-impedance or power-off state[2]		-0.5	6.5	V
Vo	Voltage range applied to any output in the high or low state [2][3]		-0.5	V_{CC}+0.5	V
I_{IK}	Input clamp current	V_I<0		-50	mA
I_{OK}	Output clamp current	V_O<0		-50	mA
I_O	Continuous output current			±50	mA
	Continuous current through V_{CC} or GND			±100	mA
θ_{JA}	Package thermal impedance [4]	SOT23-5		230	°C/W
		SC70-5		380	
		XDFN1X1-6		440	
T_J	Junction temperature [5]		-65	150	°C
T_{stg}	Storage temperature		-65	150	°C

(1) Stresses beyond those listed under Absolute Maximum Ratings may cause permanent damage to the device. These are stress ratings only, and functional operation of the device at these or any other conditions beyond those indicated under Recommended Operating Conditions is not implied. Exposure to absolute-maximum-rated conditions for extended periods may affect device reliability.

(2) The input and output negative-voltage ratings may be exceeded if the input and output current ratings are observed.

(3) The value of V_{CC} is provided in the Recommended Operating Conditions table.

(4) The package thermal impedance is calculated in accordance with JESD-51.

(5) The maximum power dissipation is a function of $T_{J(MAX)}$, $R_{\theta JA}$, and T_A. The maximum allowable power dissipation at any ambient temperature is $P_D = (T_{J(MAX)} - T_A) / R_{\theta JA}$. All numbers apply for packages soldered directly onto a PCB.

8.2 ESD Ratings

The following ESD information is provided for handling of ESD-sensitive devices in an ESD protected area only.

			VALUE	UNIT
$V_{(ESD)}$	Electrostatic discharge	Human-body model (HBM)	±8000	V
		Machine model (MM)	±500	V

ESD SENSITIVITY CAUTION

ESD damage can range from subtle performance degradation to complete device failure. Precision integrated circuits may be more susceptible to damage because very small parametric changes could cause the device not to meet its published specifications.

9 ELECTRICAL CHARACTERISTICS

over recommended operating free-air temperature range (TYP values are at T_A = +25°C, unless otherwise noted.) [1]

9.1 Recommended Operating Conditions

PARAMETER	SYMBOL	TEST CONDITIONS	MIN	MAX	UNIT
Supply voltage	V_{CC}	Operating	1.65	5.5	V
		Data retention only	1.5	5.5	
High-level input voltage	V_{IH}	V_{CC}=1.65V to 1.95V	0.65 x V_{CC}		V
		V_{CC}=2.3V to 2.7V	1.7		
		V_{CC}=3V to 3.6V	2.2		
		V_{CC}=4.5V to 5.5V	0.7 x V_{CC}		
Low-level input voltage	V_{IL}	V_{CC}=1.65V to 1.95V		0.15 x V_{CC}	V
		V_{CC}=2.3V to 2.7V		0.3	
		V_{CC}=3V to 3.6V		0.4	
		V_{CC}=4.5V to 5.5V		0.15 x V_{CC}	
Input voltage	V_I		0	5.5	V
Output voltage	V_O		0	V_{CC}	V
Input transition rise or fall	t_r, t_f	V_{CC}=1.8V± 0.15V, 2.5V ± 0.2V		20	ns/V
		V_{CC}=3.3V± 0.3V		10	
		V_{CC}=5V± 0.5V		5	
Operating temperature	T_A		-40	+125	°C

9.2 Electrical Characteristics

PARAMETER		TEST CONDITIONS	V_{CC}	TEMP	MIN	TYP	MAX	UNIT
V_{OH}		I_{OH} = -100μA	1.65V to 5.5V	Full	V_{CC}-0.1			V
		I_{OH} = -4mA	1.65V		1.2			
		I_{OH} = -8mA	2.3V		1.9			
		I_{OH} = -16mA	3V		2.4			
		I_{OH} = -24mA			2.3			
		I_{OH} = -32mA	4.5V		3.8			
V_{OL}		I_{OL} = 100μA	1.65V to 5.5V	Full			0.1	V
		I_{OL} = 4mA	1.65V				0.45	
		I_{OL} = 8mA	2.3V				0.3	
		I_{OL} = 16mA	3V				0.4	
		I_{OL} = 24mA					0.55	
		I_{OL} = 32mA	4.5V				0.55	
I_I	A or $\overline{OE}$ inputs	V_I=5.5V or GND	0V to 5.5V	+25°C		±0.1	±1	μA
				Full			±5	
I_{off}		V_I or V_O=5.5V	0V	+25°C		±0.1	±1	μA
				Full			±10	
I_{OZ}		V_O=0V to 5.5V	3.6V	Full			10	μA
I_{CC}		V_I=5.5V or GND, I_O=0	1.65V to 5.5V	+25°C		0.1	1	μA
				Full			10	
ΔI_{CC}		One input at V_{CC}-0.6V, Other inputs at V_{CC} or GND	3V to 5.5V	Full			500	μA

9.3 Switching Characteristics, C_L=30pF or 50pF

T_A=25°C

PARAMETER	FROM (INPUT)	TO (OUTPUT)	V_{CC}=1.8V ±0.15V	V_{CC}=2.5V ±0.2V	V_{CC}=3.3V ±0.3V	V_{CC}=5V ±0.5V	UNIT
			TYP	TYP	TYP	TYP	
t_{pd}	A	Y	12	7	6	4.3	ns
t_{en}	$\overline{OE}$	Y	14.9	7.8	6.5	4.8	ns
t_{dis}	$\overline{OE}$	Y	11.4	7.4	5.7	5	ns

9.4 Operating Characteristics

T_A=25°C

PARAMETER			TEST CONDITIONS	V_{CC}=1.8V	V_{CC}=2.5V	V_{CC}=3.3V	V_{CC}=5V	UNIT
				TYP	TYP	TYP	TYP	
C_{pd}	Power dissipation capacitance	Output enabled	f=10MHz	18	18	19	21	pF
		Output disabled		2	2	2	4	

(1) All unused inputs of the device must be held at V_{CC} or GND to ensure proper device operation.

10 Parameter Measurement Information

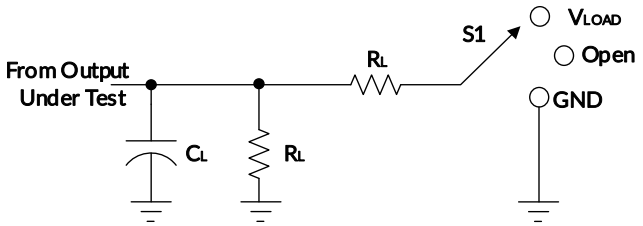

TEST	S1
t_{PLH}/t_{PHL}	Open
t_{PLZ}/t_{PZL}	V_{LOAD}
t_{PHZ}/t_{PZH}	GND

V_{CC}	INPUTS		V_M	V_{LOAD}	C_L	R_L	V_Δ
	V_I	t_r/t_f					
1.8V±0.15V	V_{CC}	≤2ns	$V_{CC}/2$	2 x V_{CC}	30pF	1KΩ	0.15V
2.5V±0.2V	V_{CC}	≤2ns	$V_{CC}/2$	2 x V_{CC}	30pF	500Ω	0.15V
3.3V±0.3V	3V	≤2.5ns	1.5V	6V	50pF	500Ω	0.3V
5V±0.5V	V_{CC}	≤2.5ns	$V_{CC}/2$	2 x V_{CC}	50pF	500Ω	0.3V

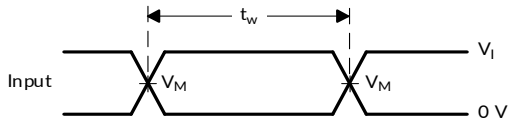

VOLTAGE WAVEFORMS
PULSE DURATION

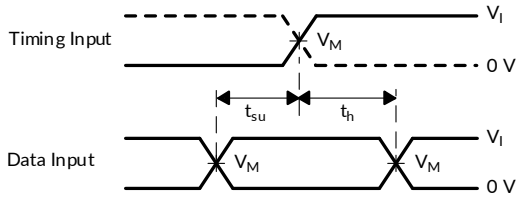

VOLTAGE WAVEFORMS
SETUP AND HOLD TIMES

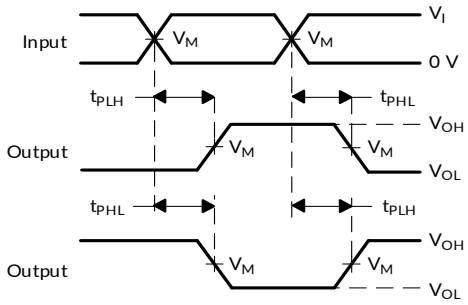

VOLTAGE WAVEFORMS PROPAGATION DELAY
TIMES INVERTION AND NON INVERTING OUTPUTS

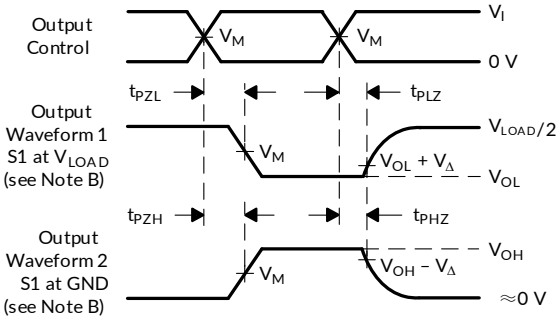

VOLTAGE WAVEFORMS ENABLE AND DISABLE TIMES
LOW-AND HIGH-LEVEL ENABLING

NOTES: A. C_L includes probe and jig capacitance.
B. Waveform 1 is for an output with internal conditions such that the output is low, except when disabled by the output control. Waveform 2 is for an output with internal conditions such that the output is high, except when disabled by the output control.
C. All input pulses are supplied by generators having the following characteristics: PRR ≤ 10 MHz, Z_O = 50 Ω.
D. The outputs are measured one at a time, with one transition per measurement.
E. t_{PLZ} and t_{PHZ} are the same as t_{dis}.
F. t_{PZL} and t_{PZH} are the same as t_{en}.
G. t_{PLH} and t_{PHL} are the same as t_{pd}.
H. All parameters and waveforms are not applicable to all devices.

Figure 1. Load Circuit and Voltage Waveforms

11 PACKAGE OUTLINE DIMENSIONS

SOT23-5 (3)

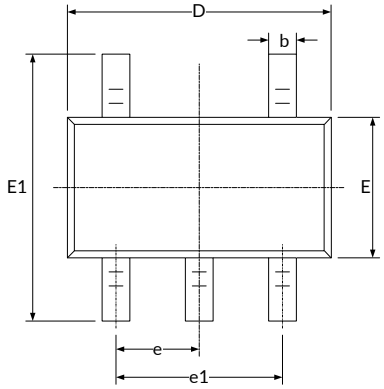

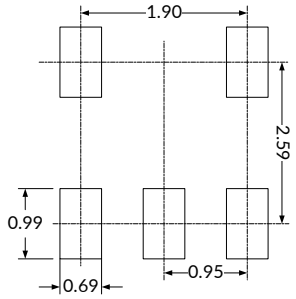

RECOMMENDED LAND PATTERN (Unit: mm)

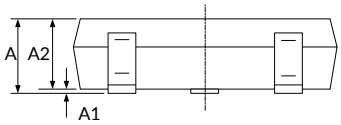

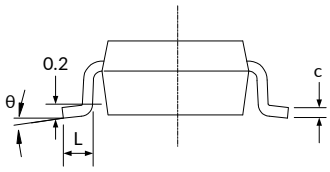

Symbol	Dimensions In Millimeters		Dimensions In Inches	
	Min	Max	Min	Max
A (1)	1.050	1.250	0.041	0.049
A1	0.000	0.100	0.000	0.004
A2	1.050	1.150	0.041	0.045
b	0.300	0.500	0.012	0.020
c	0.100	0.200	0.004	0.008
D (1)	2.820	3.020	0.111	0.119
E (1)	1.500	1.700	0.059	0.067
E1	2.650	2.950	0.104	0.116
e	0.950(BSC) (2)		0.037(BSC) (2)	
e1	1.800	2.000	0.071	0.079
L	0.300	0.600	0.012	0.024
θ	0°	8°	0°	8°

NOTE:

1. Plastic or metal protrusions of 0.15mm maximum per side are not included.
2. BSC (Basic Spacing between Centers), "Basic" spacing is nominal.
3. This drawing is subject to change without notice.

SC70-5 (3)

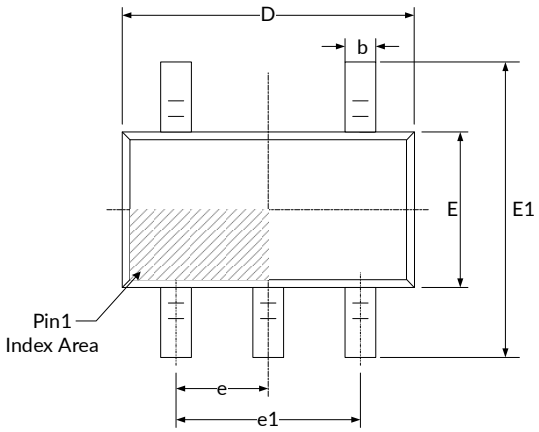

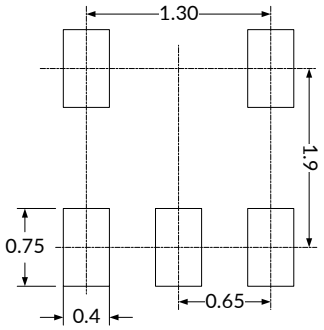

RECOMMENDED LAND PATTERN (Unit: mm)

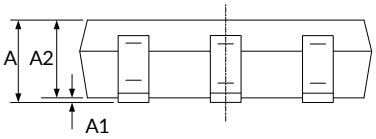

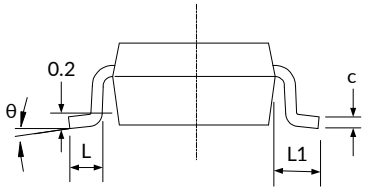

Symbol	Dimensions In Millimeters		Dimensions In Inches	
	Min	Max	Min	Max
A (1)	0.900	1.100	0.035	0.043
A1	0.000	0.100	0.000	0.004
A2	0.900	1.000	0.035	0.039
b	0.150	0.350	0.006	0.014
c	0.080	0.150	0.003	0.006
D (1)	2.000	2.200	0.079	0.087
E (1)	1.150	1.350	0.045	0.053
E1	2.150	2.450	0.085	0.096
e	0.650(BSC) (2)		0.026(BSC) (2)	
e1	1.300(BSC) (2)		0.051(BSC) (2)	
L	0.260	0.460	0.010	0.018
L1	0.525		0.021	
θ	0°	8°	0°	8°

NOTE:
1. Plastic or metal protrusions of 0.15mm maximum per side are not included.
2. BSC (Basic Spacing between Centers), "Basic" spacing is nominal.
3. This drawing is subject to change without notice.

XDFN1X1-6 (3)

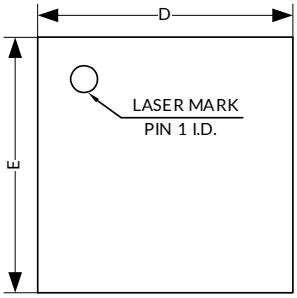

TOP VIEW

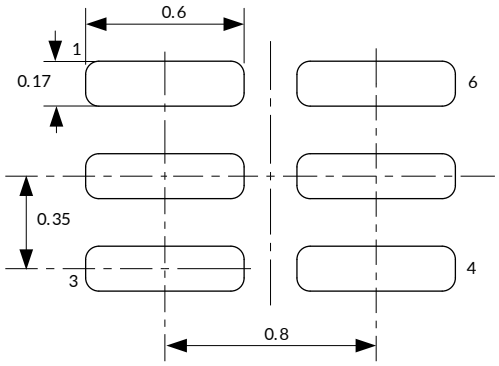

LAND PATTERN EXAMPLE

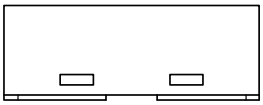

SIDE VIEW

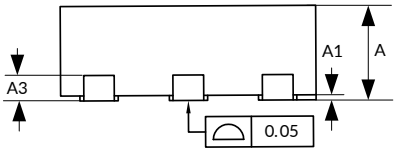

SIDE VIEW

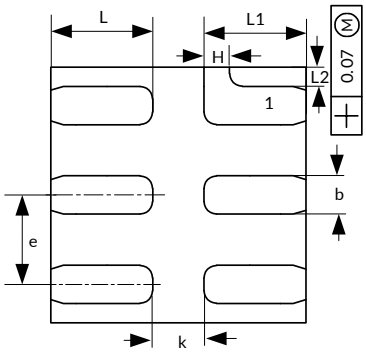

BOTTOM VIEW

Symbol	Dimensions In Millimeters		Dimensions In Inches	
	Min	Max	Min	Max
A (1)	0.340	0.400	0.013	0.016
A1	0.000	0.050	0.000	0.002
A3	0.100 (REF) (2)		0.004 (REF) (2)	
b	0.100	0.200	0.004	0.008
D (1)	0.950	1.050	0.037	0.041
E (1)	0.950	1.050	0.037	0.041
e	0.300	0.400	0.012	0.016
H	0.100 (REF) (2)		0.004 (REF) (2)	
K	0.150		0.006	
L	0.350	0.450	0.014	0.018
L1	0.350	0.450	0.014	0.018
L2	0.075 (REF) (2)		0.003 (REF) (2)	

NOTE:

1. Plastic or metal protrusions of 0.075mm maximum per side are not included.
2. REF is the abbreviation for Reference.
3. This drawing is subject to change without notice.

12 TAPE AND REEL INFORMATION

REEL DIMENSIONS

TAPE DIMENSION

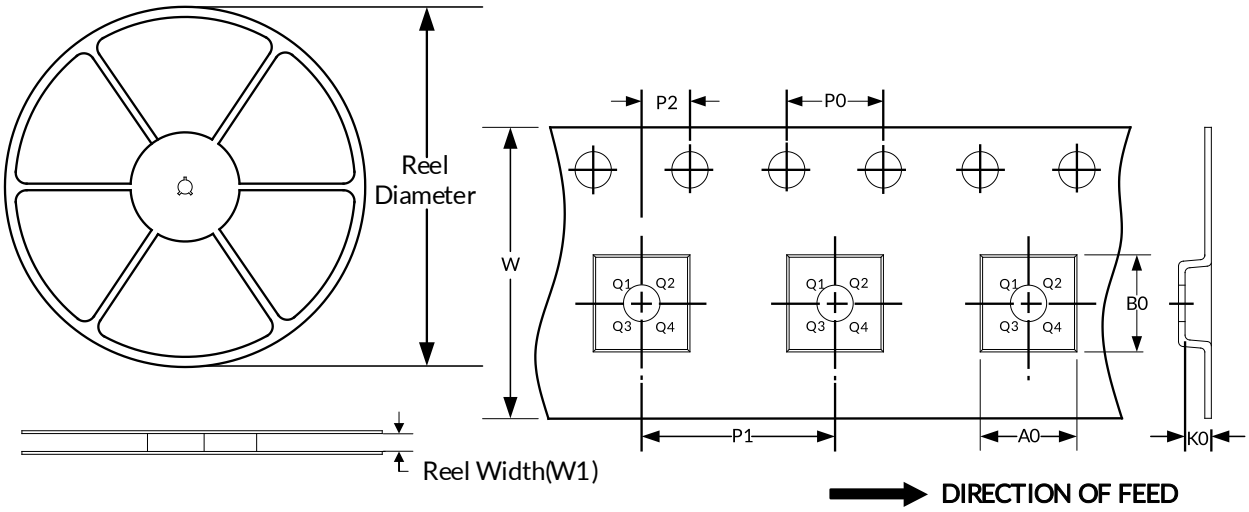

NOTE: The picture is only for reference. Please make the object as the standard.

KEY PARAMETER LIST OF TAPE AND REEL

Package Type	Reel Diameter	Reel Width(mm)	A0 (mm)	B0 (mm)	K0 (mm)	P0 (mm)	P1 (mm)	P2 (mm)	W (mm)	Pin1 Quadrant
SC70-5	7”	9.5	2.25	2.55	1.20	4.0	4.0	2.0	8.0	Q3
SOT23-5	7”	9.5	3.20	3.20	1.40	4.0	4.0	2.0	8.0	Q3
XDFN1X1-6	7”	9.5	1.14	1.17	0.56	4.0	4.0	2.0	8.0	Q1

NOTE:
1. All dimensions are nominal.
2. Plastic or metal protrusions of 0.15mm maximum per side are not included.

IMPORTANT NOTICE AND DISCLAIMER

Jiangsu RUNIC Technology Co., Ltd. will accurately and reliably provide technical and reliability data (including data sheets), design resources (including reference designs), application or other design advice, WEB tools, safety information and other resources, without warranty of any defect, and will not make any express or implied warranty, including but not limited to the warranty of merchantability Implied warranty that it is suitable for a specific purpose or does not infringe the intellectual property rights of any third party.

These resources are intended for skilled developers designing with RUNIC products You will be solely responsible for: (1) Selecting the appropriate products for your application; (2) Designing, validating and testing your application; (3) Ensuring your application meets applicable standards and any other safety, security or other requirements; (4) RUNIC and the RUNIC logo are registered trademarks of RUNIC INCORPORATED. All trademarks are the property of their respective owners; (5) For change details, review the revision history included in any revised document. The resources are subject to change without notice. Our company will not be liable for the use of this product and the infringement of patents or third-party intellectual property rights due to its use.