Ultra-Low ON-Resistance, Low Voltage, Dual, SPDT Analog Switch

1 FEATURES

- **-3dB Bandwidth: 110MHz**
- **High Speed, Typically 55ns**
- **Supply Range: +1.8V to +5.5V**
- **Low ON-State Resistance, 0.6Ω(TYP)**
- **Break-Before-Make Switching**
- **Rail-to-Rail Operation**
- **TTL/CMOS Compatible**
- **Extended Industrial Temperature Range: -40°C to +125°C**
- **Micro SIZE PACKAGES: MSOP10、DFN3X3-10**

2 APPLICATIONS

- **Wearable Devices**
- **Battery-Operated Equipment**
- **Signal Gating, Chopping, Modulation or Demodulation (Modem)**
- **Portable Computing**
- **Cell Phones**

3 DESCRIPTIONS

The RS2105 is a dual, low on-resistance, single-pole double-throw (SPDT) analog switch that is designed to operate from 1.8 V to 5.5 V.

The RS2105 device can handle both analog and digital signals. It features fast switching speeds (55ns) and low on-resistance (0.6Ω TYP).

Applications include signal gating, chopping, modulation or demodulation (modem), and signal multiplexing for analog-to-digital and digital-to-analog conversion systems.

Device Information (1)

PART NUMBER	PACKAGE	BODY SIZE (NOM)
RS2105	MSOP10	3.00mm×3.00mm
	DFN3X3-10	3.00mm×3.00mm

(1) For all available packages, see the orderable addendum at the end of the data sheet.

4 Functional Block Diagram

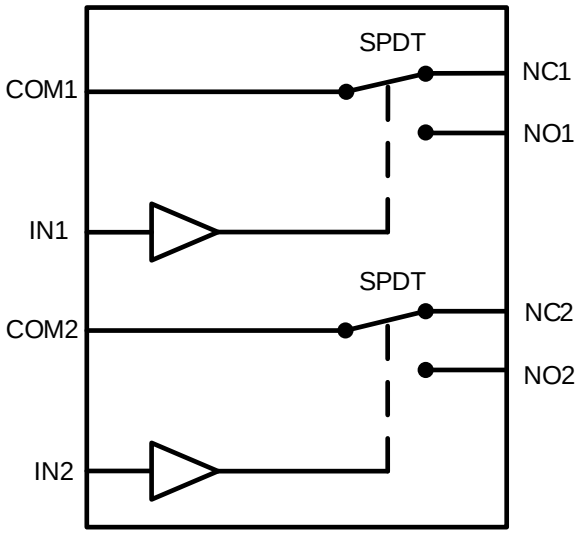

Table of Contents

5 Revision History

Note: Page numbers for previous revisions may different from page numbers in the current version.

VERSION	Change Date	Change Item
E.1	2022/09/05	Version updated
E.1.1	2024/03/07	Modify packaging naming

6 PACKAGE/ORDERING INFORMATION (1)

PRODUCT	ORDERING NUMBER	TEMPERATURE RANGE	PACKAGE LEAD	PACKAGE MARKING (2)	PACKAGE OPTION
RS2105	RS2105HXN	-40°C ~125°C	MSOP10	RS2105	Tape and Reel,4000
	RS2105HXTDC10	-40°C ~125°C	DFN3X3-10	RS2105	Tape and Reel,5000

NOTE:

(1) This information is the most current data available for the designated devices. This data is subject to change without notice and revision of this document. For browser-based versions of this data sheet, refer to the right-hand navigation.

(2) There may be additional marking, which relates to the lot trace code information (data code and vendor code), the logo or the environmental category on the device.

7 Pin Configuration and Functions (Top View)

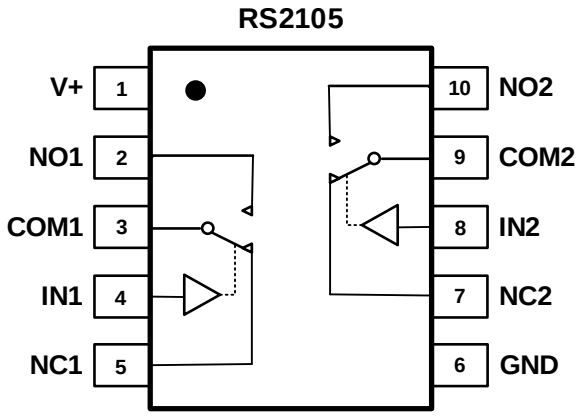

MSOP10

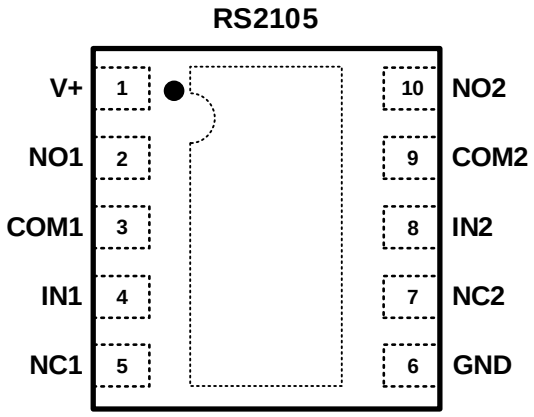

DFN3X3-10

7.1 PIN DESCRIPTION

NAME	PIN	FUNCTION
	MSOP10/DFN3X3-10	
V+	1	Power Supply
NO1, NO2	2,10	Normally-open terminal
COM1, COM2	3,9	Common terminal
IN1, IN2	4,8	Digital control pin to connect COM terminal to NO or NC terminals
NC1, NC2	5,7	Normally-closed terminal
GND	6	Ground

7.2 Function Table

LOGIC	NO	NC
0	OFF	ON
1	ON	OFF

8 SPECIFICATIONS

8.1 Absolute Maximum Ratings

Over operating free-air temperature range (unless otherwise noted) (1)

SYMBOL	PARAMETER		MIN	MAX	UNIT
V_+	Supply voltage (2)		-0.3	6	V
V_{IN}	Control Input voltage (2)		-0.3	6	
$V_{I/O}$	Switch I/O voltage (3)(4)		-0.3	$(V_+)+0.3$	
I_{IN}	Continuous Current NO, NC or COM		-500	+500	mA
$I_{I/O}$	Peak Current NO, NC, or COM		-800	+800	
θ_{JA}	Package thermal impedance (5)	MSOP10		200	°C/W
		DFN3X3-10		43	
T_J	Junction temperature (6)		-40	150	°C
T_{stg}	Storage temperature		-65	+150	

(1) Stresses above these ratings may cause permanent damage. Exposure to absolute maximum conditions for extended periods may degrade device reliability. These are stress ratings only, and functional operation of the device at these or any other conditions beyond those specified is not implied.
(2) All voltages are with respect to ground, unless otherwise specified.
(3) The input and output negative-voltage ratings may be exceeded if the input and output clamp-current ratings are observed.
(4) This value is limited to 5.5 V maximum.
(5) The package thermal impedance is calculated in accordance with JESD-51.
(6) The maximum power dissipation is a function of $T_{J(MAX)}$, $R_{\theta JA}$, and T_A. The maximum allowable power dissipation at any ambient temperature is $P_D = (T_{J(MAX)} - T_A) / R_{\theta JA}$. All numbers apply for packages soldered directly onto a PCB.

8.2 ESD Ratings

The following ESD information is provided for handling of ESD-sensitive devices in an ESD protected area only.

			VALUE	UNIT
$V_{(ESD)}$	Electrostatic discharge	Human-body model (HBM), per ANSI/ESDA/JEDEC JS-001(1)	±2000	V
		Charged-device model (CDM), per ANSI/ESDA/JEDEC JS-002(2)	±1000	
		Machine Model (MM)	±200	

(1) JEDEC document JEP155 states that 500 V HBM allows safe manufacturing with a standard ESD control process.
(2) JEDEC document JEP157 states that 250 V CDM allows safe manufacturing with a standard ESD control process.

ESD SENSITIVITY CAUTION

ESD damage can range from subtle performance degradation to complete device failure. Precision integrated circuits may be more susceptible to damage because very small parametric changes could cause the device not to meet its published specifications.

8.3 Recommended Operating Conditions

Over operating free-air temperature range (unless otherwise noted)

SYMBOL	PARAMETER	MIN	MAX	UNIT
V_+	Supply voltage	1.8	5.5	V
IN	Analog voltage	0	5.5	V
NO,NC,COM	Analog voltage	0	V+	V
T_A	Operating temperature	-40	+125	°C

8.4 ELECTRICAL CHARACTERISTICS

V+ = 5.0 V, T_A= -40°C to 125°C (unless otherwise noted)

PARAMETER	SYMBOL	CONDITIONS	V+	T_A	MIN	TYP	MAX	UNIT
ANALOG SWITCH								
Analog Signal Range	V_{NO}, V_{NC}, V_{COM}			FULL	0		V+	V
On-Resistance	R_{ON}	0 ≤ (V_{NO} or V_{NC}) ≤V+, I_{COM} = -10mA, Switch ON, See Figure 16	5V	+25°C		0.6	1.0	Ω
				FULL			1.2	Ω
		V_{NO} or V_{NC}=2V, I_{COM} = -10mA, Switch ON, See Figure 16	3.3V	+25°C		1.4	1.8	Ω
				FULL			2.0	Ω
On-Resistance Match Between Channels	ΔR_{ON}	0 ≤ (V_{NO} or V_{NC}) ≤V+, I_{COM} = -10mA, Switch ON, See Figure 16	5V	+25°C		0.04	0.1	Ω
				FULL			0.12	Ω
			3.3V	+25°C		0.04	0.1	Ω
				FULL			0.12	Ω
On-Resistance Flatness	$R_{FLAT(ON)}$	0 ≤ (V_{NO} or V_{NC}) ≤V+, I_{COM} = -10mA, Switch ON, See Figure 16	5V	+25°C		0.18	0.3	Ω
				FULL			0.4	Ω
			3.3V	+25°C		0.85	1.0	Ω
				FULL			1.2	Ω
NC, NO OFF Leakage Current	$I_{NC(OFF)}$, $I_{NO(OFF)}$	V_{NO} or V_{NC} = 0.3V, V+/2 V_{COM} = V+/2, 0.3V See Figure 17	1.8 to 5.5V	FULL			1	μA
NC, NO, COM ON Leakage Current	$I_{NC(ON)}$, $I_{NO(ON)}$, $I_{COM(ON)}$	V_{NO} or V_{NC} = 0.3V, Open V_{COM} = Open, 0.3V See Figure 18	1.8 to 5.5V	FULL			1	μA
DIGITAL CONTROL INPUTS (1)								
Input High Voltage	V_{INH}		5V	FULL	1.5			V
			3.3V	FULL	1.3			V
Input Low Voltage	V_{INL}		5V	FULL			0.6	V
			3.3V	FULL			0.5	V
Input Leakage Current	I_{IN}	V_{IN} = V_{IO} or 0	1.8 to 5.5V	FULL			1	μA

(1) All unused digital inputs of the device must be held at V_{IO} or GND to ensure proper device operation.

ELECTRICAL CHARACTERISTICS (continued)

V+ = 5.0 V, T_A= -40°C to 125°C (unless otherwise noted)

ARAMETER	SYMBOL	CONDITIONS		V+	T_A	MIN	TYP	MAX	UNIT
DYNAMIC CHARACTERISTICS									
Turn-On Time	t_{ON}	V_{COM} = V+, R_L = 300Ω, C_L = 35pF, See Figure 20		5V	+25°C		35		ns
					FULL			50	
				3.3V	+25°C		55		
					FULL			70	
Turn-Off Time	t_{OFF}	V_{COM} = V+, R_L = 300Ω, C_L = 35pF, See Figure 20		5V	+25°C		7.5		ns
					FULL			15	
				3.3V	+25°C		12		
					FULL			17	
Crosstalk	X_{TALK}	V+=5.5V, Switch on, R_L=50Ω, F=100KHz		5.5V	+25°C		-80		dB
Break Before Make Time	t_{BBM}	V+=V_{COM}=5V, R_L=300Ω, C_L=35pF		5V	+25°C		2.5		ns
					FULL	1			
Off Isolation	O_{ISO}	R_L = 50Ω, Switch ON, See Figure 23	f= 100KHz	5.5V	+25°C		-70		dB
			f= 10KHz	5.5V	+25°C		-86		dB
-3dB Bandwidth	BW	Switch ON, R_L = 50Ω, See Figure 22		5.5V	+25°C		110		MHz
NC, NO OFF Capacitance	$C_{NC(OFF)}$, $C_{NO(OFF)}$	V_{NC} or V_{NO}=V+/2 or GND, Switch OFF See Figure 19		5V	+25°C		30		pF
NC, NO, COM ON Capacitance	$C_{NC(ON)}$, $C_{NO(ON)}$, $C_{COM(ON)}$	V_{NC} or V_{NO}=V+/2 or GND, Switch ON See Figure 19		5V	+25°C		100		pF
POWER REQUIREMENTS									
Power Supply Range	V_+				FULL	1.8		5.5	V
Power Supply Current	I_+	V_{IN} = GND or V_+		5.5V	+25°C			1	μA
					FULL			1	
Supply-Current Change	$\triangle I_+$	V+=5.5V, V_{IN}=3.4V		5.5V	FULL			10	μA

8.5 TYPICAL CHARACTERISTICS

NOTE: The graphs and tables provided following this note are a statistical summary based on a limited number of samples and are provided for informational purposes only.

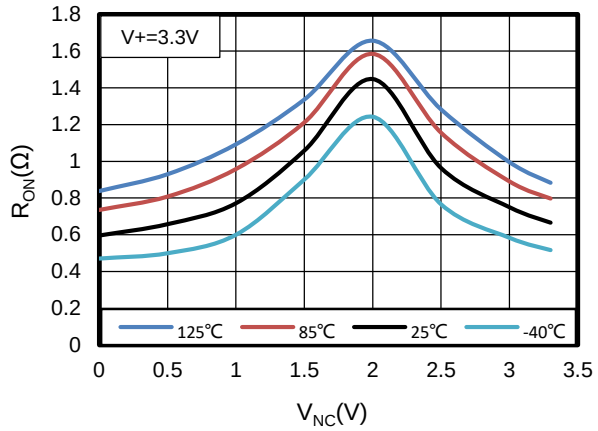

Figure 1. On-Resistance vs NC Voltage

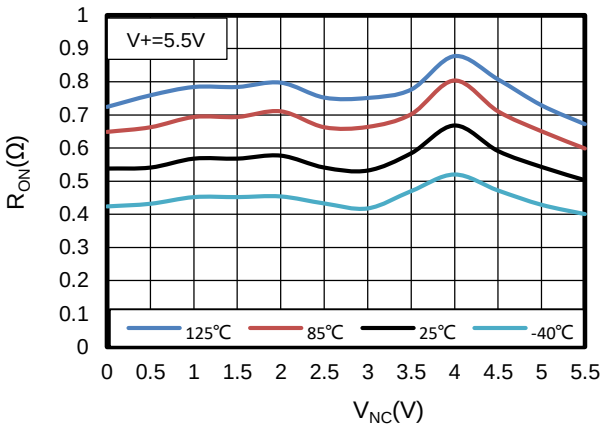

Figure 2. On-Resistance vs NC Voltage

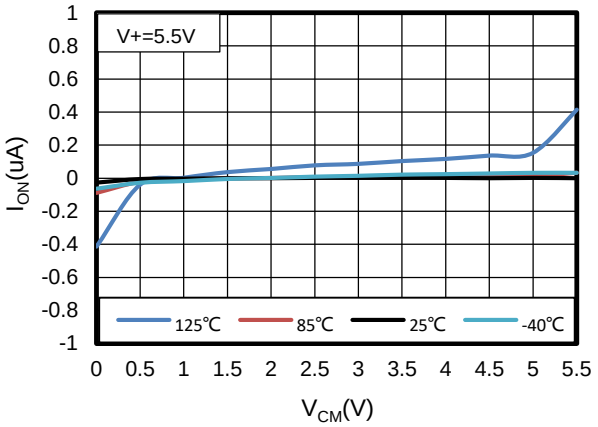

Figure 3. ON-State leakage current vs Common-Mode Voltage

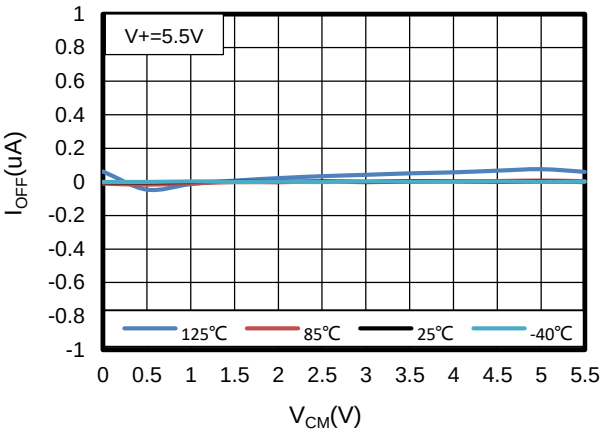

Figure 4. OFF-State leakage current vs Common-Mode Voltage

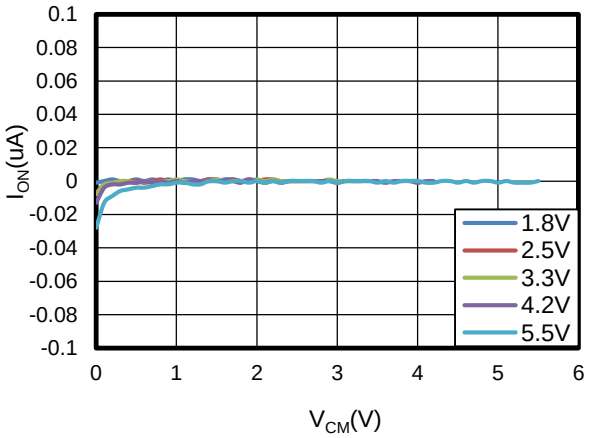

Figure 5. ON-State leakage current vs Common-Mode Voltage

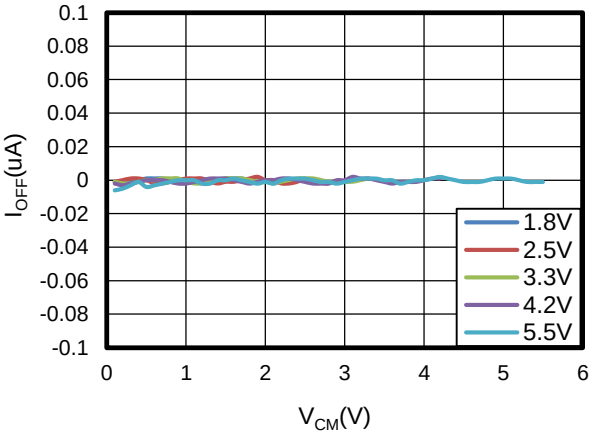

Figure 6. OFF-State leakage current vs Common-Mode Voltage

TYPICAL CHARACTERISTICS

NOTE: The graphs and tables provided following this note are a statistical summary based on a limited number of samples and are provided for informational purposes only.

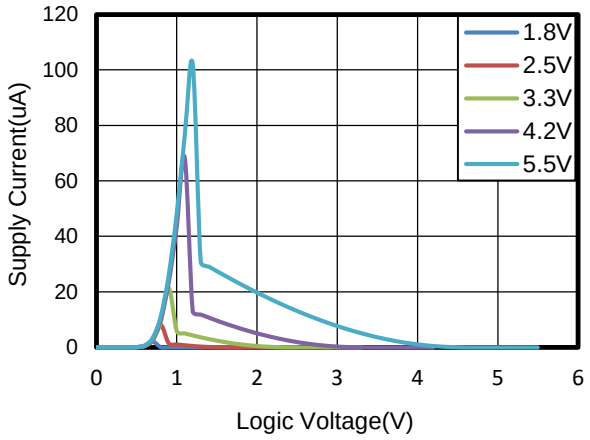

Figure 7. Supply Current vs Logic Voltage

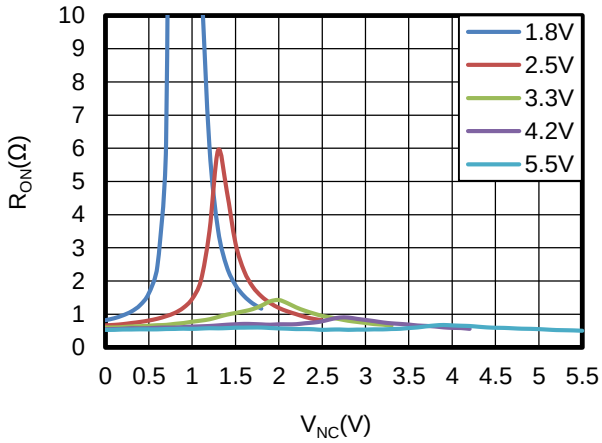

Figure 8. On-Resistance vs NC Voltage

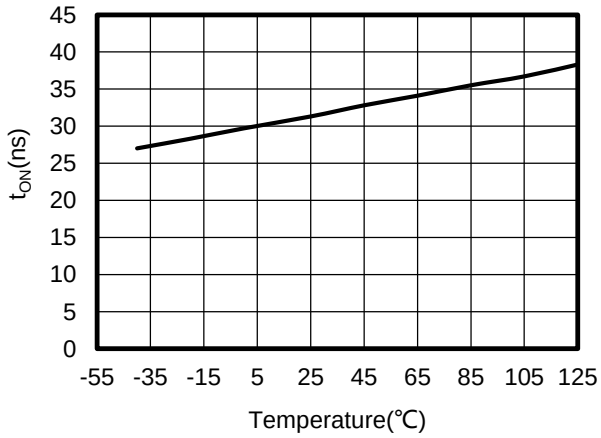

Figure 9. Turn on Time vs Temperature

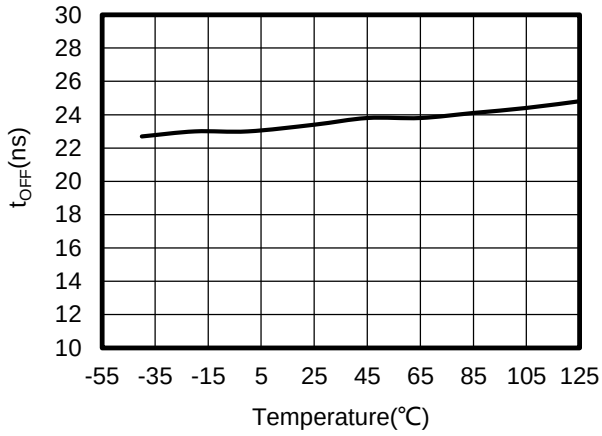

Figure 10. Turn-off Time vs Temperature

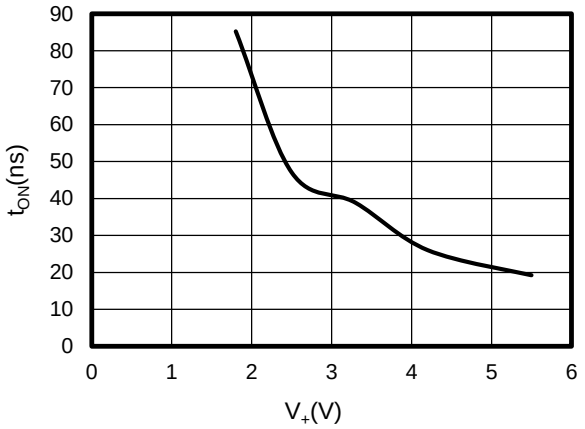

Figure 11. Turn On Time vs Supply Voltage

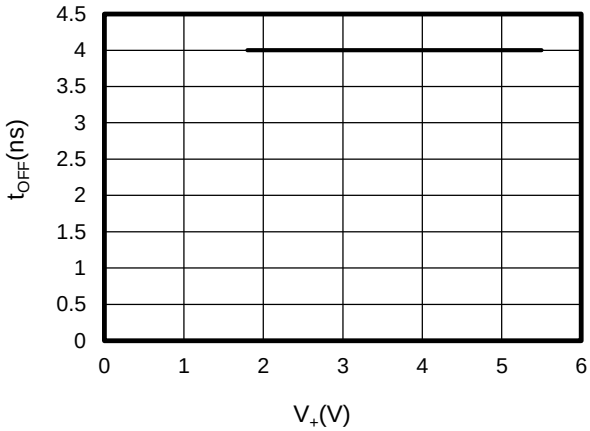

Figure 12. Turn-Off Time vs Supply Voltage

TYPICAL CHARACTERISTICS

NOTE: The graphs and tables provided following this note are a statistical summary based on a limited number of samples and are provided for informational purposes only.

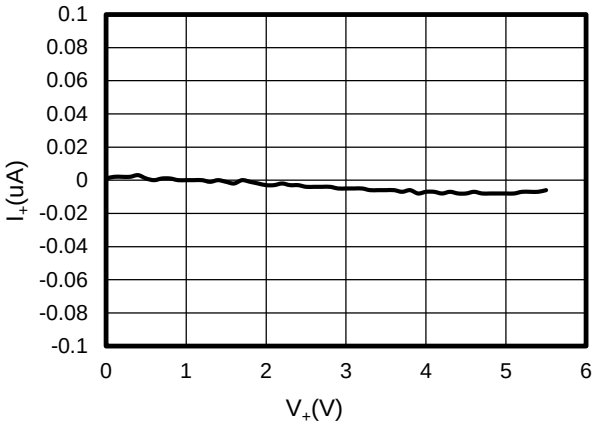

Figure 13. Supply Current vs Supply Voltage

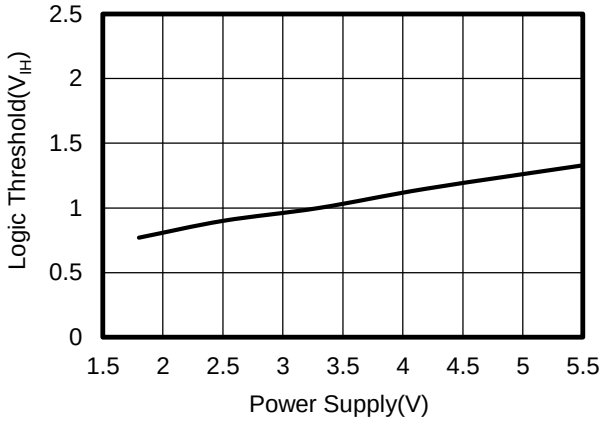

Figure 14. Logic Threshold vs Power Supply

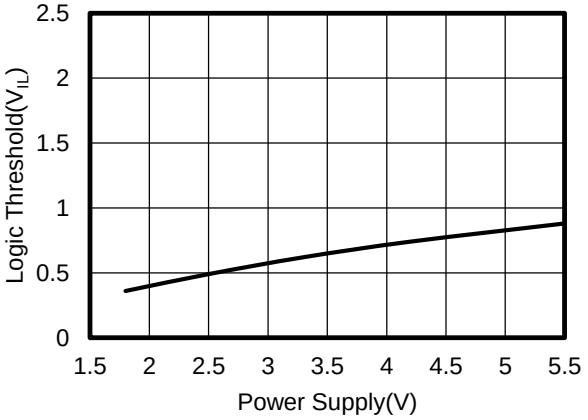

Figure 15. Logic Threshold vs Power Supply

9 Parameter Measurement Information

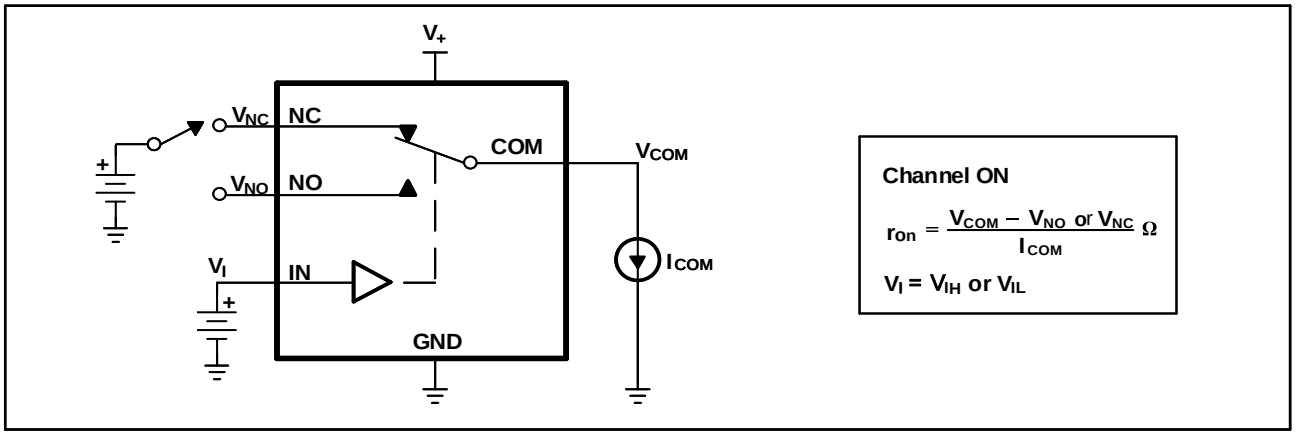

Figure 16. ON-State Resistance (r_{on})

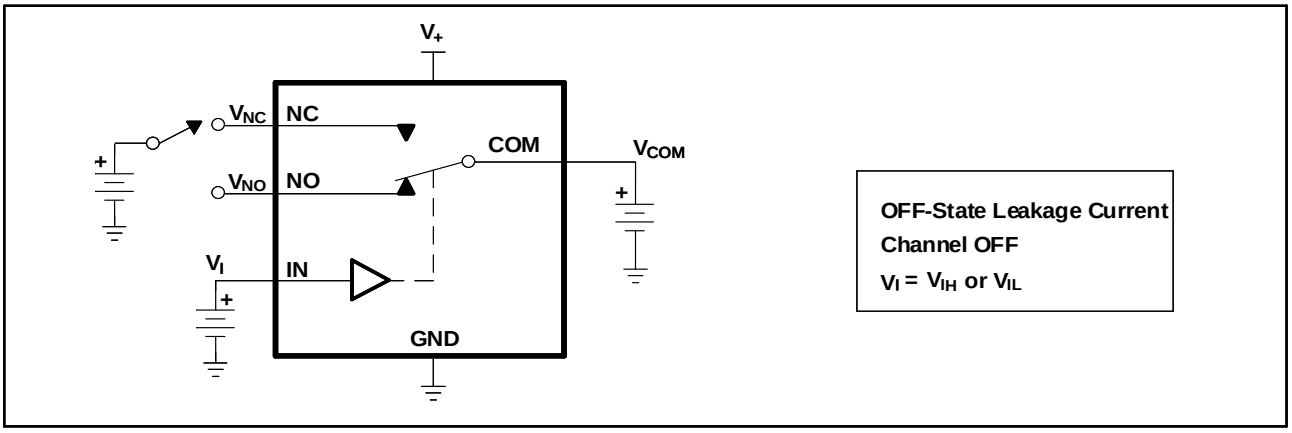

Figure 17. OFF-State Leakage Current ($I_{NC(OFF)}$, $I_{NO(OFF)}$)

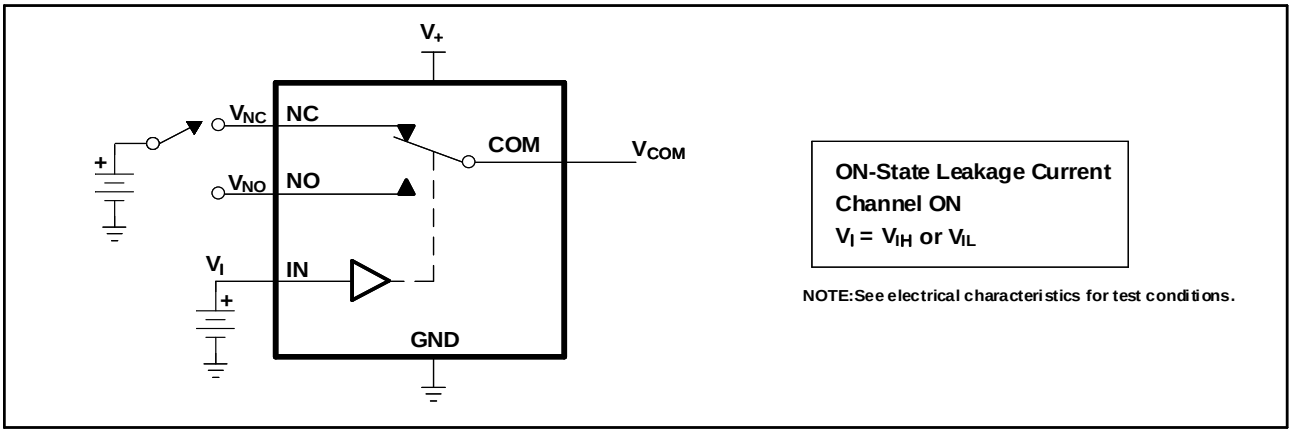

Figure 18. ON-State Leakage Current ($I_{COM(ON)}$, $I_{NC(ON)}$,$I_{NO(ON)}$)

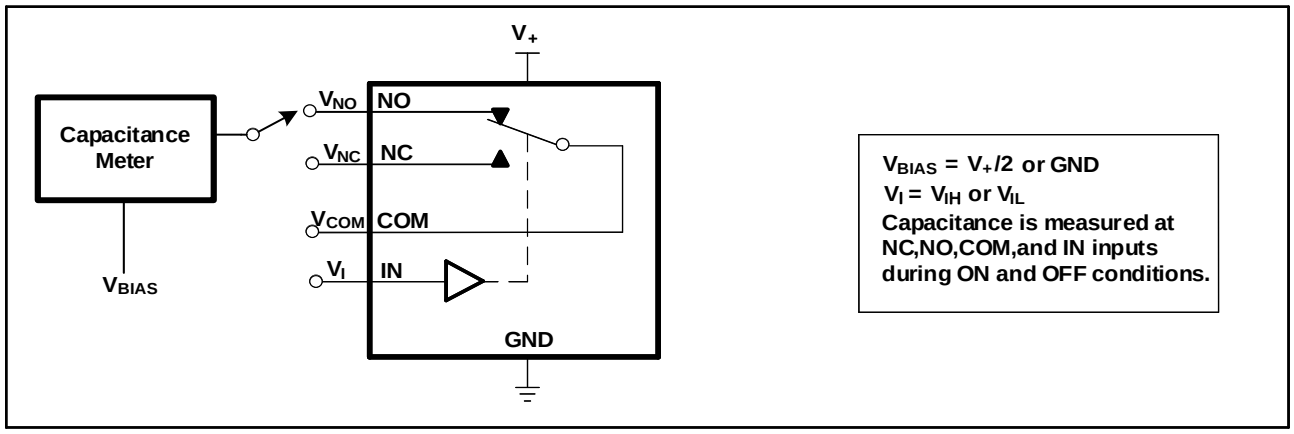

Figure 19. Capacitance (C_I, $C_{COM(ON)}$, $C_{NC(OFF)}$, $C_{NC(ON)}$, $C_{NO(OFF)}$, $C_{NO(ON)}$)

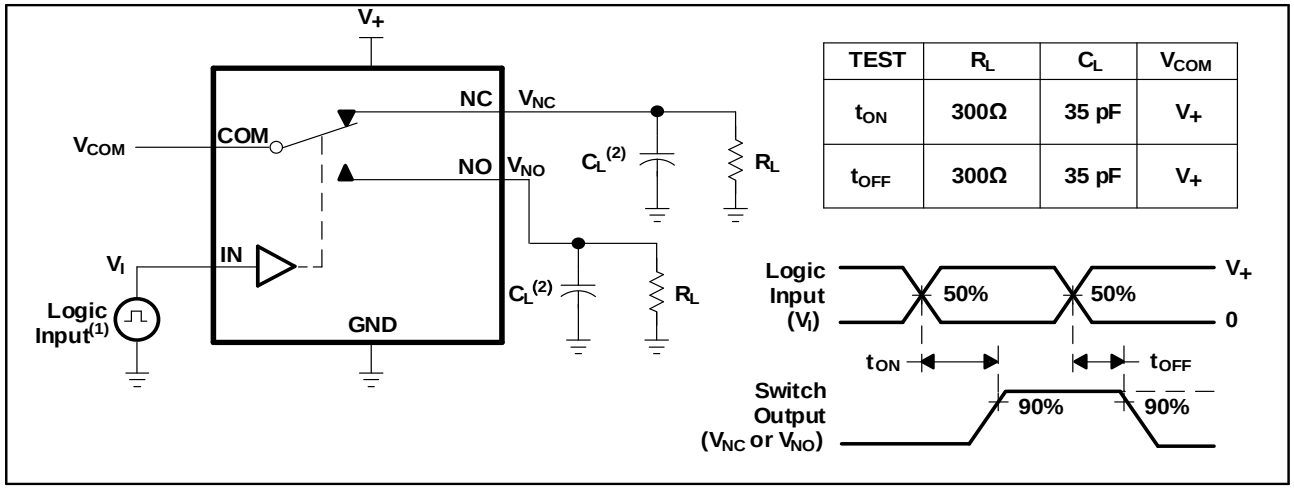

TEST	R_L	C_L	V_{COM}
t_{ON}	300Ω	35 pF	V_+
t_{OFF}	300Ω	35 pF	V_+

Figure 20. Turn-On (t_{ON}) and Turn-Off Time (t_{OFF})

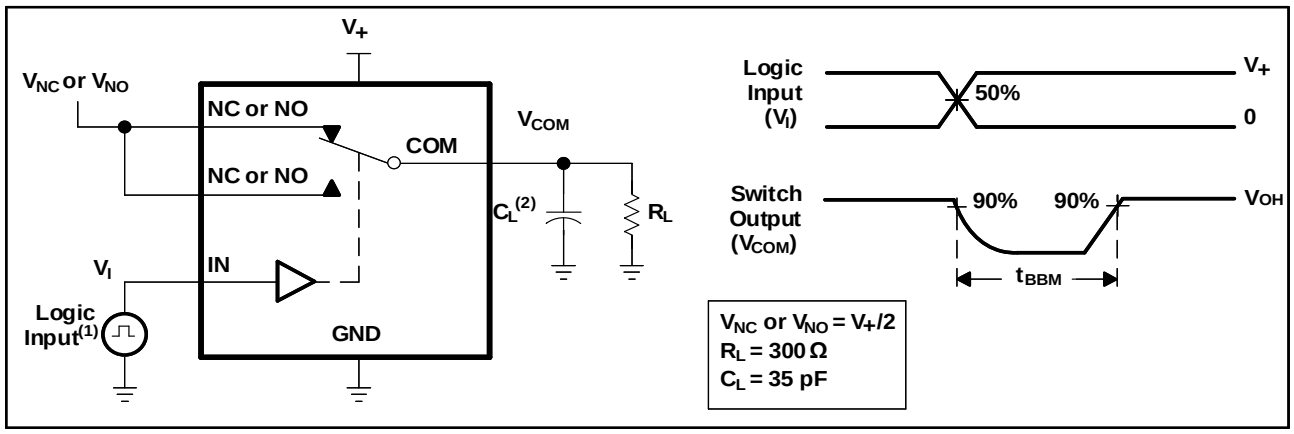

Figure 21. Break-Before-Make Time (t_{BBM})

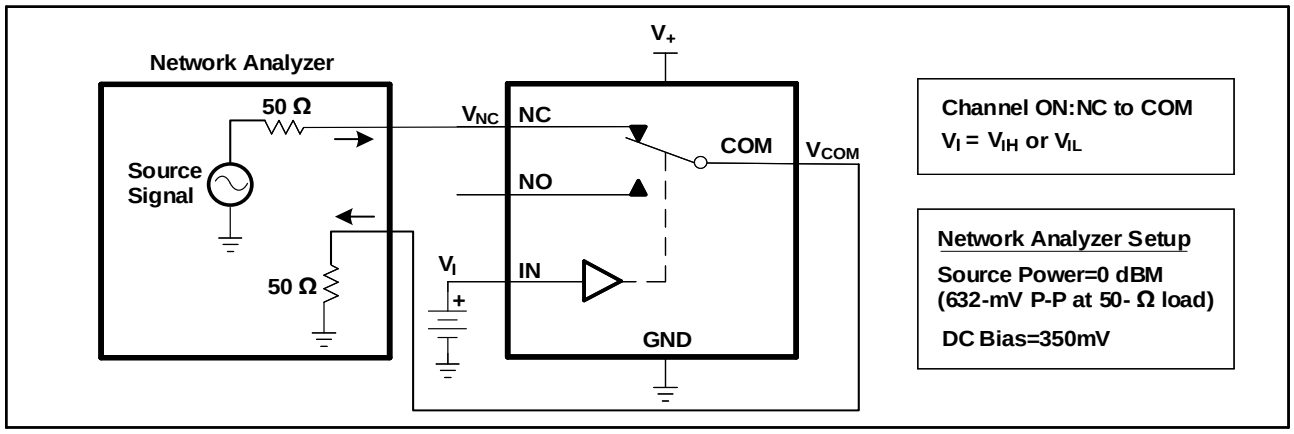

Figure 22. Bandwidth (BW)

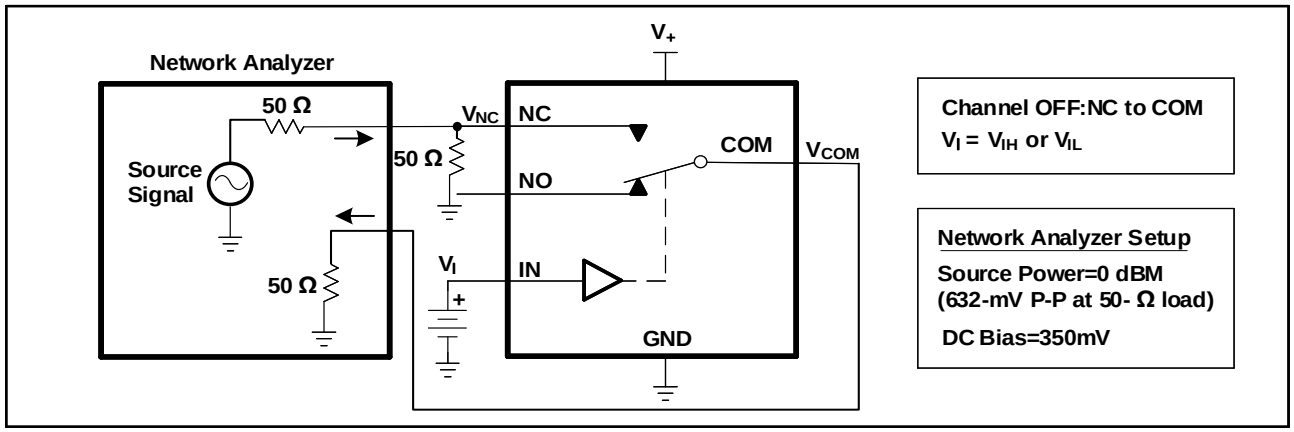

Figure 23. OFF Isolation (O_{ISO})

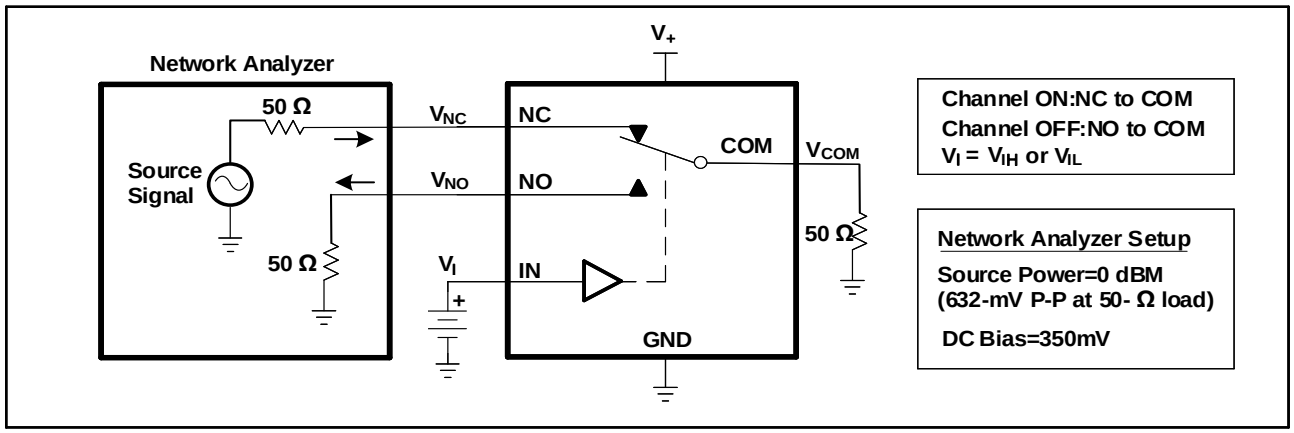

Figure 24. Crosstalk (X_{TALK})

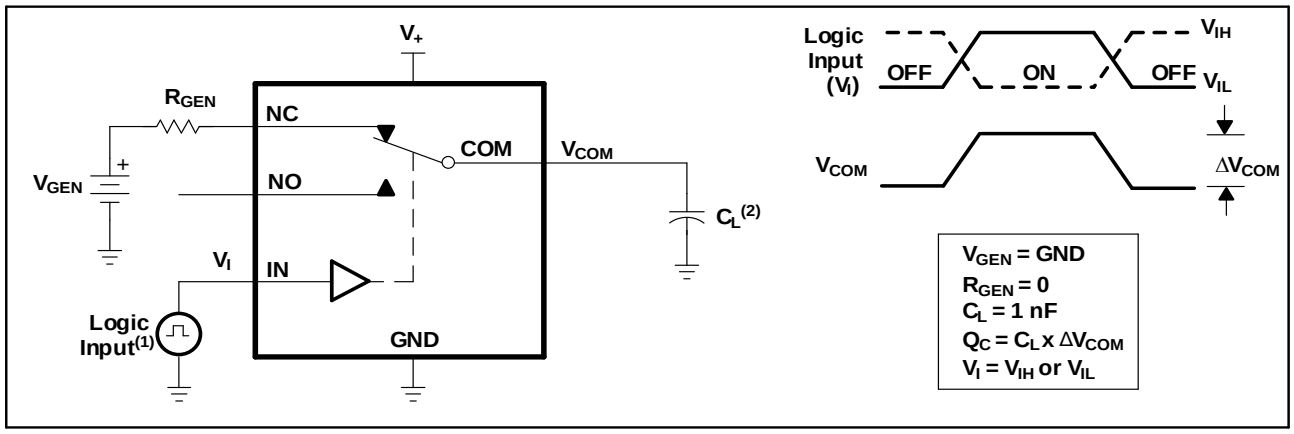

Figure 25. Charge Injection (Q_C)

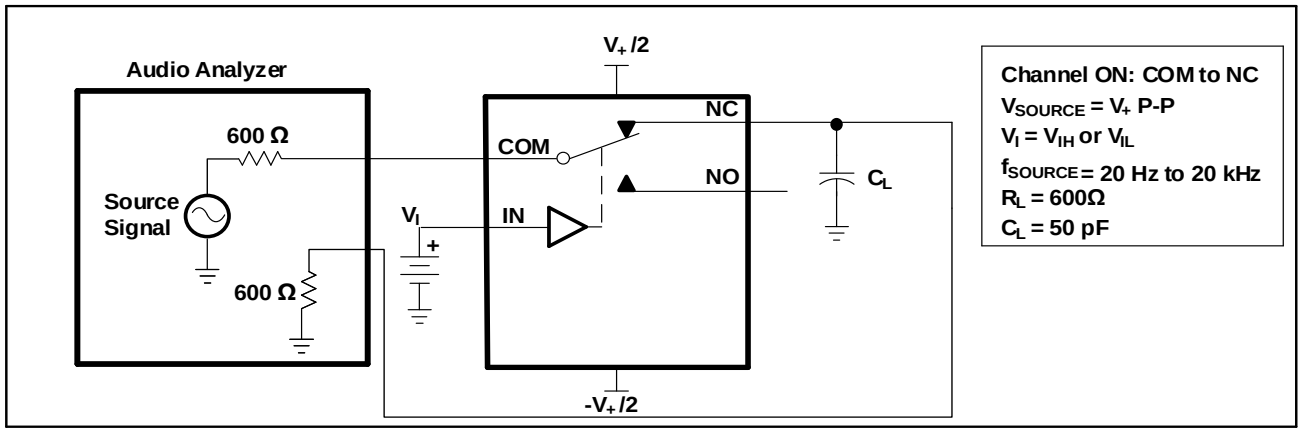

Figure 26. Total Harmonic Distortion (THD)

10 PACKAGE OUTLINE DIMENSIONS

MSOP10

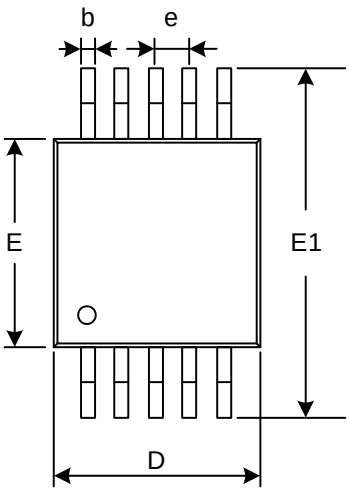

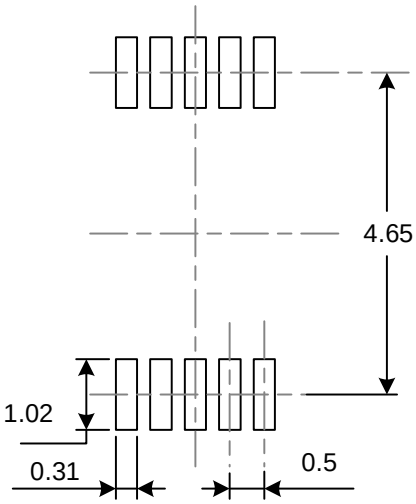

RECOMMENDED LAND PATTERN (Unit: mm)

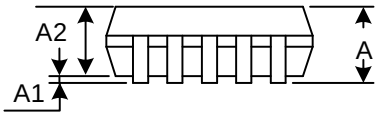

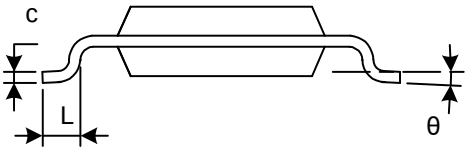

Symbol	Dimensions In Millimeters		Dimensions In Inches	
	Min	Max	Min	Max
A	0.820	1.100	0.032	0.043
A1	0.020	0.150	0.001	0.006
A2	0.750	0.950	0.030	0.037
b	0.180	0.280	0.007	0.011
c	0.090	0.230	0.004	0.009
D	2.900	3.100	0.114	0.122
e	0.500(BSC)		0.020(BSC)	
E	2.900	3.100	0.114	0.122
E1	4.750	5.050	0.187	0.199
L	0.400	0.800	0.016	0.031
θ	0°	6°	0°	6°

DFN3X3-10

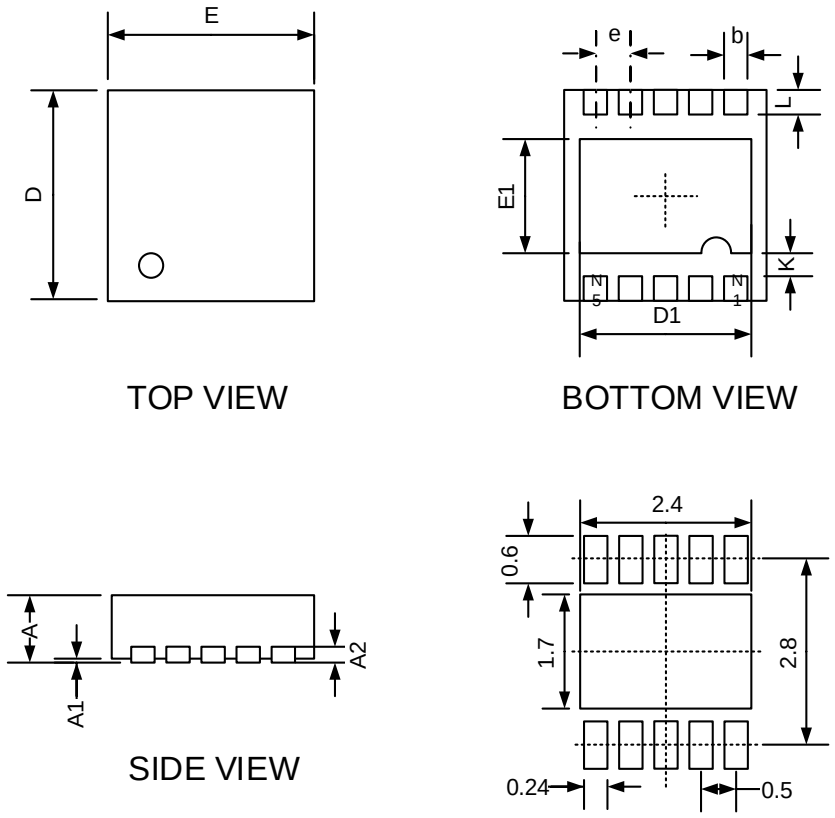

RECOMMENDED LAND PATTERN (Unit: mm)

Symbol	Dimensions In Millimeters		Dimensions In Inches	
	Min	Max	Min	Max
A	0.700	0.800	0.028	0.031
A1	0.000	0.050	0.000	0.002
A2	0.203		0.008	
b	0.180	0.300	0.007	0.012
D	2.900	3.100	0.114	0.122
D1	2.300	2.600	0.091	0.103
E	2.900	3.100	0.114	0.122
E1	1.500	1.800	0.059	0.071
e	0.500 TYP		0.020 TYP	
k	0.200 MIN		0.008 MIN	
L	0.300	0.500	0.012	0.020

NOTE:

A. All linear dimension is in millimeters.
B. This drawing is subject to change without notice.
C. Body dimensions do not include mold flash or protrusion. Mold flash and protrusion shall not exceed 0.15 per side.
D. BSC: Basic Dimension. Theoretically exact value shown without tolerances.

11 TAPE AND REEL INFORMATION

REEL DIMENSIONS

TAPE DIMENSION

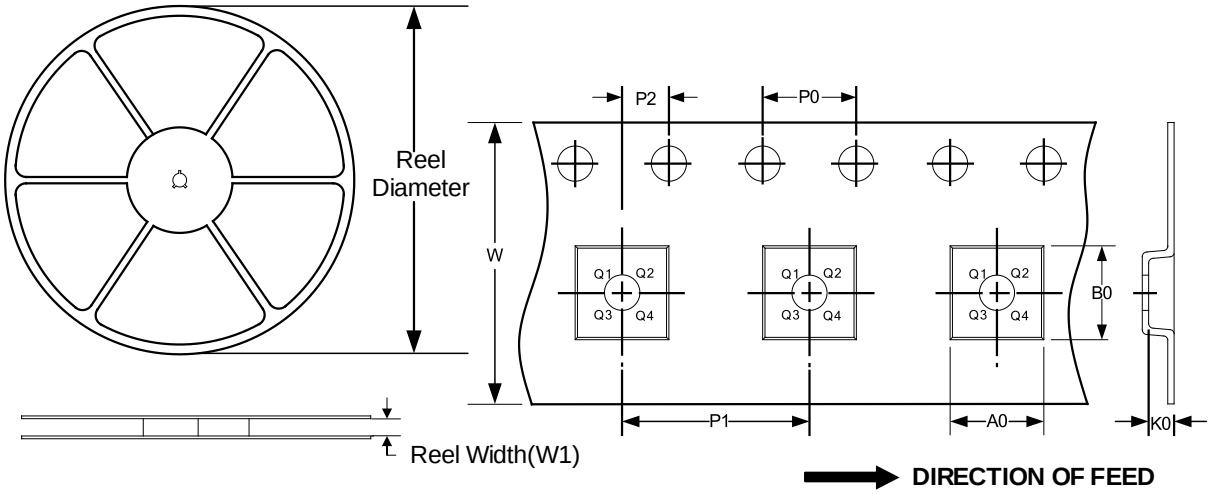

NOTE: The picture is only for reference. Please make the object as the standard.

KEY PARAMETER LIST OF TAPE AND REEL

Package Type	Reel Diameter	Reel Width (mm)	A0 (mm)	B0 (mm)	K0 (mm)	P0 (mm)	P1 (mm)	P2 (mm)	W (mm)	Pin1 Quadrant
MSOP10	13”	12.4	5.20	3.30	1.20	4.0	8.0	2.0	12.0	Q1
DFN3X3-10	13”	12.4	3.35	3.35	1.13	4.0	8.0	2.0	12.0	Q1

NOTE:
1. All dimensions are nominal.
2. Plastic or metal protrusions of 0.15mm maximum per side are not included.

IMPORTANT NOTICE AND DISCLAIMER

Jiangsu RUNIC Technology Co., Ltd. will accurately and reliably provide technical and reliability data (including data sheets), design resources (including reference designs), application or other design advice, WEB tools, safety information and other resources, without warranty of any defect, and will not make any express or implied warranty, including but not limited to the warranty of merchantability Implied warranty that it is suitable for a specific purpose or does not infringe the intellectual property rights of any third party.

These resources are intended for skilled developers designing with RUNIC products You will be solely responsible for: (1) Selecting the appropriate products for your application; (2) Designing, validating and testing your application; (3) Ensuring your application meets applicable standards and any other safety, security or other requirements; (4) RUNIC and the RUNIC logo are registered trademarks of RUNIC INCORPORATED. All trademarks are the property of their respective owners; (5) For change details, review the revision history included in any revised document. The resources are subject to change without notice. Our company will not be liable for the use of this product and the infringement of patents or third-party intellectual property rights due to its use.